ISO 20022
Payments

Swiss Implementation Guidelines
for Customer-to-Bank Messages
Credit Transfer (Payment Transactions)

Customer Credit Transfer Initiation (pain.001) and
Customer Payment Status Report (pain.002)

Version 1.5.1 – 23.10.2015

Any suggestions or questions relating to this document should be addressed to the financial institution in question or to SIX Interbank Clearing Ltd at the following address: pm@six-group.com.

Description of amendments

The previous amendments from the preceding version are marked in the document using the track changes facility, to the extent that these amendments are meaningful. Layout amendments, corrections of spelling mistakes and altered terms that are repeated several times throughout the entire document, are not marked.

The amendments are marked in the document with a vertical blue line in the margin.

Amendment control

Version	*Date*	*Comment*
1.0	15.02.2010	First edition (only German version)
1.1	30.04.2010	New "Contact Details" element (1.8) for details of the software used and which version, inserted in the "Customer Credit Transfer Initiation" (pain.001) message.
		Only characters in the SWIFT dataset are permitted for "Message Identification" (1.1), "Payment Information Identification" (2.1), "Instruction Identification" (2.29) and "End To End Identification" (2.30) in the "Customer Credit Transfer Initiation" (pain.001) message.
		In the "Group Status" element in the "Customer Payment Status Report" (pain.002) message, status changed from Mandatory to Dependent and the text of the definition amended.
1.2	16.08.2011	General document update
1.3	30.04.2012	Various clarifications and additions, new company logo
1.4	30.06.2013	Various clarifications and additions, taking account of the EPC Definitions that will apply from 1.2.2014.
1.5	10.08.2015	Section 1: New documents of the Swiss recommendations and their description added. Section 1.1: Note to download address for most recent version inserted. Section 1.2: New version 8.0 of the EPC Rulebook and the EPC Implementation Guidelines. Section 1.3.2: New documents of the Swiss recommendations added. Section 1.5: Note to permitted characters inserted. Status list extended. Reference to EPC submission using an XML schema published by the EPC removed. Section 1.6: Description and example of how to represent a selection inserted. Section 2.2 divided into section 2.2.1 (previous text) and new section 2.2.2 (look ahead to "Payment slip with QR code" with new payment types E1 and E2. Section 2.2.1: Notes to tables 4 and 5 inserted. Section 2.3: Tables updated. New payment types E1 and E2, CH error codes deleted, Changes to definitions for the "Code" element (2.9 and 2.34), "Instruction for Debtor Agent" (2.85), various changes to payment type-specific definitions. Section 2.4.2.2: Note on IPI slip inserted. Section 3.2: Tables updated. Notes to CH error codes deleted. Section 3.2.5: CH error codes deleted. List of error codes updated. Section 3.4: In the example, ISO error code used instead of CH error code. Appendix D: Illustration updated.
1.5.1	23.10.2015	Publication as "Minor" version: Payment type E2 corrected to payment type E1 in "Reference" element (index 2.126) and origin from QR Code Index 7 specified.

Table of contents

1 Introduction 5
1.1 Amendment control 5
1.2 Reference documents 6
1.3 Summary of message standards 6
1.3.1 ISO 20022 6
1.3.2 Swiss ISO 20022 Payments Standard 7
1.3.3 SEPA Message Standard 8
1.4 Representation of XML messages 9
1.5 XML message conventions 9
1.6 Conventions for presentation 11
1.7 Scope 12
2 Customer Credit Transfer Initiation (pain.001) 13
2.1 General 13
2.2 Payment types 14
2.2.1 Procedure for the validation by the financial institution 14
2.2.2 Look ahead to "Payment slip with QR code" (with effect from 2018) 16
2.3 Technical specifications 19
2.3.1 Group Header (GrpHdr, A-Level) 19
2.3.2 Payment Information (PmtInf, B-Level) 22
2.3.3 Credit Transfer Transaction Information (CdtTrfTxInf, C-Level) 29
2.4 Business specifications 43
2.4.1 Character set 43
2.4.2 References 44
2.4.3 Debtor identification 46
2.4.4 Duplicate checking 46
2.4.5 Use of address information 46
2.5 Example of a payment order as "pain.001" message 48
2.5.1 The business situation in the example 48
2.5.2 Data in the example 48
3 Customer Payment Status Report (pain.002) 50
3.1 General 50
3.2 Technical specifications 51
3.2.1 Group Header (GrpHdr, A-Level) 51
3.2.2 Original Group Information And Status (OrgnlGrpInfAndSts, B-Level) 53
3.2.3 Original Payment Information And Status (OrgnlPmtInfAndSts, C-Level) 56
3.2.4 Transaction Information And Status (TxInfAndSts, D-Level) 59
3.2.5 Status Reason Codes 63
3.3 Business specifications 65
3.4 Examples of Status Reports as pain.002 messages 65
Appendix A: XML schemas and examples 66
Appendix B: Symbols for graphical XML representation 67
Appendix C: Character conversion table 69
Appendix D: Basis for the Swiss recommendations 71
Appendix E: Table of tables 72
Appendix F: Table of figures 72

1 Introduction

These Swiss recommendations for implementing the message standards for Payments Initiation and Cash Management based on ISO standard 20022 have been produced on the instructions of PaCoS (Payments Committee Switzerland), a committee under the Swiss Payments Council (SPC). This version is based on the ISO Maintenance Release 2009 and the latest EPC recommendations.

The Swiss recommendations consist of the following documents:

- Swiss Business Rules
- Swiss Implementation Guidelines
  - for Credit Transfer and Status Report (pain.001/pain.002) (this document)
  - for the Swiss direct debit procedure and Status Report (pain.008/pain.002)
  - for the SEPA direct debit procedure and Status Report (pain.008/pain.002), valid until October 2016
  - for Cash Management messages (camt.052, camt.053 and camt.054)
- Swiss Usage Guide (use cases and examples)

The first document, the ***Business Rules***, describes the requirements of business representatives of users, financial institutions and software providers, from the point of view of processes. It discusses the following subjects:

- Definition and description of specific business transactions, describing the relevant parties and the messages that are used (types of payments, versions of reports)
- Summary of message structures with more detail about certain structural elements
- Description of the main validation rules and ways of handling errors.

The ***Implementation Guidelines*** serve as manuals for the technical implementation of the standard and provide assistance in producing the various message types. They describe the XML structures and validation rules for national and cross-border payment transactions, including the Payment Status Report.

The ***Swiss Usage Guide*** provides field rules and examples to explain the most frequent use cases (payment types) and explains how ISO 20022 messages (customer-to-bank or bank-to-customer) should be structured according to the Swiss recommendations, so providing an end-to-end overview of the whole process.

1.1 Amendment control

The Swiss Business Rules and Implementation Guidelines documents are subject to the amendment authority of

SIX Interbank Clearing Ltd
Hardturmstr. 201
CH-8021 Zurich

and reflect the regulations of Swiss financial institutions. Any future amendments and additions will be made by SIX Interbank Clearing.

The latest version of this document can be downloaded from the SIX Interbank Clearing website at the following address: www.iso-payments.ch

1.2 Reference documents

Ref	Document	Title	Source
[1]	Payments_Standards-Initiation_updated	ISO 20022 Message Definition Report: Payments – Maintenance 2009, Edition April 2009 (Approved 30.03.2009)	ISO
[2]	pain.001.001.03	XML Schema Customer Credit Transfer Initiation V03	ISO
[3]	pain.002.001.03	XML Schema Customer Payment Status Report V03	ISO
[4]	EPC125-05	SEPA Credit Transfer Rulebook Version 8.1	EPC
[5]	EPC132-08	SEPA Credit Transfer Implementation Guidelines Version 8.0	EPC
[6]	Schweizer Business Rules	ISO 20022 Payments – Swiss Business Rules for Payments and Cash Management for Customer-to-Bank Messages	SIX Interbank Clearing
[7]	Payments External Code Lists	Inventory of External Payment Code Lists	ISO
[8]	EPC142-08	EPC Guidance on the use of the future ISO standard for the Structured Creditor Reference	EPC

Table 1: Reference documents

Organisation	Link
ISO	www.iso20022.org
EPC	www.europeanpaymentscouncil.eu
SIX Interbank Clearing	www.iso-payments.ch www.sepa.ch www.six-interbank-clearing.com

Table 2: Links to the relevant Internet pages

1.3 Summary of message standards

1.3.1 ISO 20022

The ISO 20022 message standard gives details for the following Payment Initiation Messages:

- Customer Credit Transfer Initiation (pain.001) and
- Customer Direct Debit Initiation (pain.008)

Other related messages include, for example:

- Customer Payment Status Report (pain.002)

All these messages are described in the document "ISO 20022 Message Definition Report Payments Standards – Maintenance 2009" [1]. The "pain.007" message is not currently used in Switzerland and is therefore not further discussed here. The "pain.008" message in Switzerland is discussed in a separate document.

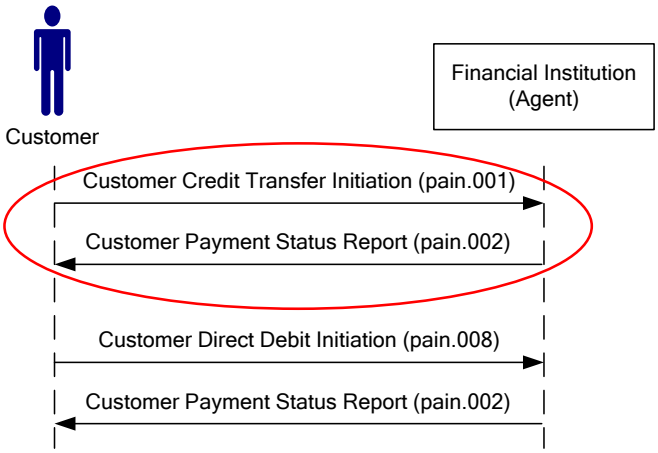

Figure 1: Payment Initiation message flow - summary

The flow of messages is shown in the above Figure 1. The "pain.002" message is sent back to the sender by the recipient of "pain.001" and "pain.008" messages in order to report back the results of validation.

The messages specified in the ISO 20022 standard can be used universally, apply to all currencies and encompass all possible options. The messages are adapted for special areas of use and country-specific circumstances, i.e. not all the options under the standard are used.

1.3.2 Swiss ISO 20022 Payments Standard

The message standard recommended by Swiss financial institutions is based on the ISO 20022 standard. In addition to the SEPA Message Standard as described in the EPC Recommendation, all common payment types in national and cross-border transactions are also supported.

The Swiss ISO 20022 Payments Standard encompasses all the data elements that are defined by the EPC in the SEPA Core Requirements as being essential, but in some cases has different definitions for the optional data elements, in order to meet the needs of Swiss financial institutions.

The Swiss ISO 20022 Payments Standard is specified in the following documents:

- ISO 20022 Payments and Cash Management – Swiss Business Rules
- ISO 20022 Payments Swiss Implementation Guidelines Customer Credit Transfer (this document)
- ISO 20022 Payments Swiss Implementation Guidelines for the SEPA Direct Debit procedure (valid until October 2016)
- ISO 20022 Payments Swiss Implementation Guidelines for the Swiss Direct Debit procedure
- ISO 20022 Payments Swiss Implementation Guidelines for Cash Management messages

The Swiss Business Rules describe the requirements of business representatives from the point of view of users, financial institutions and software manufacturers with regard to processes.

The Swiss Implementation Guidelines Credit Transfer – this document – contains technical specifications and instructions for the technical and business implementation of customer-to-bank messages, including the Payment Status Report (Bank-to-Customer), in Credit Transfers in accordance with the Swiss ISO 20022 Payments Standard.

Figure 2 below shows the degree of concordance between the Swiss ISO 20022 Payments Standards and ISO 20022 and SEPA.

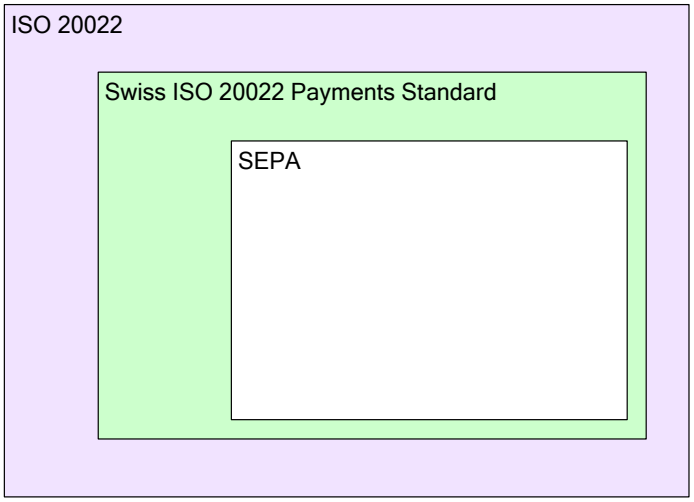

ISO 20022
- universal
- all currencies
- all options

Swiss ISO 20022 Payments Standard
- SEPA compliant
- CH-specific options

SEPA
- only for the SEPA area
- only EUR
- limited options

Figure 2: Degree of concordance between the Swiss ISO 20022 Payments Standards and ISO 20022 and SEPA

Note: The colours pale purple and pale green that are used for the ISO 20022 standard and the Swiss ISO 20022 Payments Standard are also used in the column headings of tables in this document.

1.3.3 SEPA Message Standard

For payments in the SEPA area (Single Euro Payments Area), the SEPA Message Standard and the Swiss ISO 20022 Payments Standard are of importance (see section 2.2 "Payment types", payment type 5).

In the interests of efficient usage within the SEPA area (EU countries, EEA countries Monaco and Switzerland), some restrictions were applied within the ISO 20022 standard, which were approved by the European Payments Council (EPC), the decision-making body of the European banks and bankers' associations for payment transactions, in October 2009.

The SEPA Message Standard is specified in the following documents published on the website of the European Payments Council (EPC):

- EPC125-05 SEPA Credit Transfer Rulebook [4]
- EPC132-08 SEPA Credit Transfer Implementation Guidelines [5]

1.4 Representation of XML messages

The logic structure of XML messages is a tree structure. This can be represented in various ways: in diagrams, tables or text. Representation in text is very suitable for actual examples of messages, while tables and diagrams are mainly suitable for giving an overview of XML schemas. The illustrations in this document are based on the schema in the Swiss recommendations.

XML editors which have the option of graphical representation use symbols which may look slightly different depending on the type of editor (the illustrations in this document were produced using the editor XMLSpy from Altova GmbH). The main symbols are briefly introduced in Appendix B. More detailed information can be found in the user manual or the online help for the XML editor that is being used.

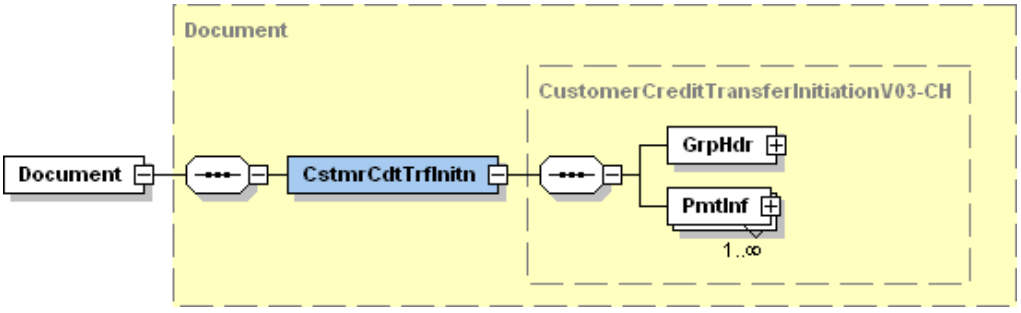

Figure 3: Example of graphical representation of an XML message

1.5 XML message conventions

A basic knowledge of XML is assumed for the purposes of this document, so only certain special points are explained.

Permitted characters

The characters permitted in XML messages according to the Swiss ISO 20022 Payments Standard are listed in section 2.4.1 "Character set".

Note: The use of blank elements is not permitted.

Statuses

The following statuses (information about usage) are permitted for individual XML elements according to the Swiss ISO 20022 Payments Standard:

- **M** = Mandatory
- **R** = Recommended (should be used)
- **D** = Dependent (depending on other elements)
- **BD =** Bilaterally Determined (only permitted by agreement with the financial institution)
- **O** = Optional
- **N** = Not used (must not be used)

XML schema validation

The technical validation of the various XML messages is carried out using XML schemas. These define the elements that can be used, their status (mandatory, optional, dependent), the format of their content and the content itself (in certain cases the permitted codes are listed in the XML schema). The names of data types given in the tables of this document correspond to the data types defined in XML schemas.

For the Swiss ISO 20022 Payments Standard, its own XML schemas are published as variants of the ISO 20022 XML schemas, in which, for example, unnecessary elements have been omitted or statuses changed. These XML schemas define all the data that is valid for Switzerland. Data types which have been taken over unchanged from the ISO standard retain the same names. For those data types that have been changed, the names have been given appropriate extensions showing the differences between them and the original ISO data types.

Example 1: ISO data type: FinancialInstitutionIdentification7
Swiss data type: FinancialInstitutionIdentification7-CH_BicOrClrId

Example 2: ISO data type: PartyIdentification32
Swiss data type: PartyIdentification32-CH_NameAndId

No comments are inserted in the XML schemas. Information about the various data elements can be found in these Implementation Guidelines. In the source text for XML schemas pain.001 and pain.002, XML comments are inserted documenting the differences from the original data type under the ISO standard.

The names of the Swiss ISO 20022 Payments Standard XML schemas and links to the original XSD files are listed in Appendix A.

Indication of schema location and namespace in XML messages

The Schema Location in XML messages indicates the XML schema which should be used to carry out the technical validation and where that schema is to be found. The Schema Location also includes the namespace (xmlns="…"). If a different Schema Location is entered from the one bilaterally agreed, the whole message is rejected.

Using the Swiss XML schema

The definitions in the Swiss XML schema are the same as the descriptions in these Implementation Guidelines and should primarily be used to validate XML files that have been produced. Submissions can be made either using this Swiss XML schema or the official ISO 20022 XML schema. The XML schema which is to be used must be agreed with the relevant financial institutions.

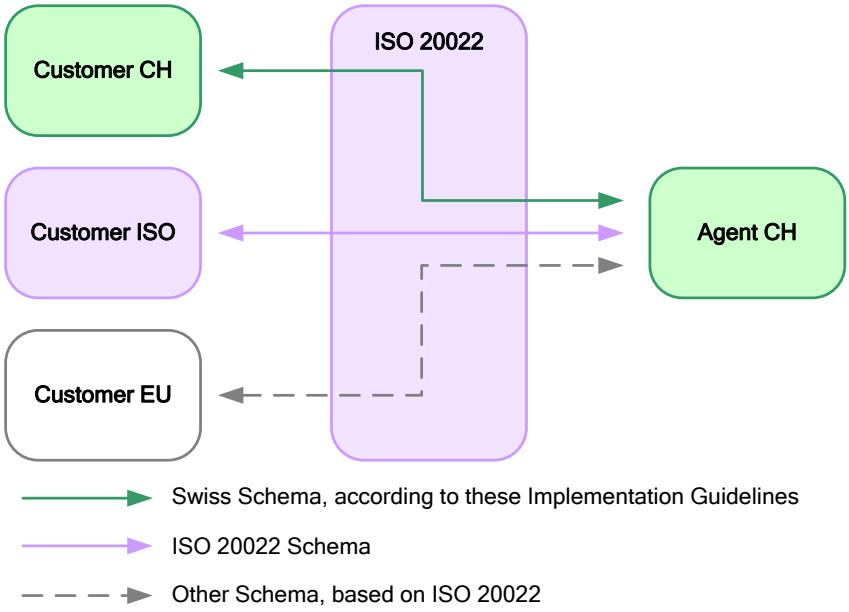

Figure 4: Using the Swiss XML schema

1.6 Conventions for presentation

In this document, the following conventions apply to presentation.

Description of XML elements

In some publications, the names of XML elements are written as a single concept with no spaces, for example CreditTransferTransactionInformation. In the interests of legibility, spaces are generally used in this document.

Data in tables

The tables contain information from ISO 20022 (Index, Multiplicity, Message Item, XML-Tag). The following information for the Swiss ISO 20022 Payments Standard can also be found in the tables:

- Status of the element (as defined in section 1.5 "XML message conventions")
- General definition
- Definitions for specific payment types
- Error code that is sent back if there are any errors in the Customer Payment Status Report (pain.002)

Note: If during schema validation an error is detected in any element, the whole message is always rejected (error code FF01). Since this response generally applies to all elements in the table, a comment to that effect is not entered for every element.

Colours used in the tables

The column headings are shaded pale purple for the information about ISO 20022 and pale green for information about the Swiss ISO 20022 Payments Standard.

Elements containing at least one sub-element are marked in pale blue in the ISO 20022 columns.

Representation of the tree structure in the tables

So that it is possible to tell where in the tree structure an element comes, the hierarchy level is indicated by preceding "+" signs in the Message Item. For example, the IBAN IBAN in the Payment Information is represented as shown:

Payment Information
+Debtor Account
++Identification
+++**IBAN**

Representation of choices

Elements with a choice are marked in the "XML Tag" column as follows:

{Or for start of the choice

Or} for end of the choice

Example:

Payment Information +Debtor Account ++Identification	Id	1..1	M
Payment Information +Debtor Account ++Identification +++IBAN	IBAN {Or	1..1	R
Payment Information +Debtor Account ++Identification +++Other	Othr Or}	1..1	D

1.7 Scope

These Implementation Guidelines only give the specifications for the customer-to-bank messages "Customer Credit Transfer Initiation" and "Customer Payment Status Report" for the Swiss ISO 20022 Payments Standard.

No aspects relating to the communication channels used for the sending of messages between customer and financial institution, and their security features, are discussed in this document. These are entirely the responsibility of the financial institutions involved and their customers.

2 Customer Credit Transfer Initiation (pain.001)

2.1 General

The Customer Credit Transfer Initiation (pain.001) XML message is used for the electronic commissioning of payment orders by customers to the financial institution. It is used on the basis of the ISO 20022 XML schema "pain.001.001.03".

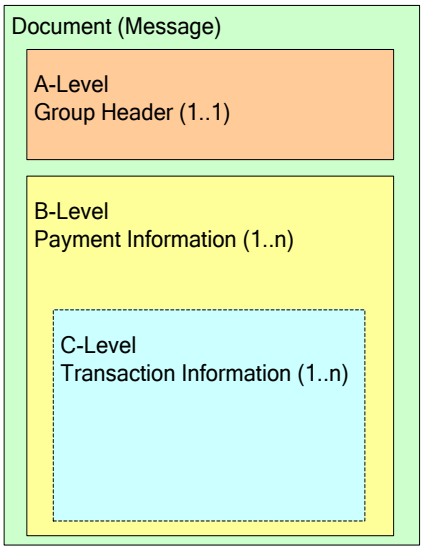

The "pain.001" XML message is essentially structured as follows:

- ***A-Level:*** message level, Group Header. This block must occur exactly once.
- ***B-Level:*** debtor side, Payment Information. This block must occur at least once and generally comprises several C-levels.
- ***C-Level:*** creditor side, Credit Transfer Transaction Information. This block must occur at least once for each B-level. It comprises all the C-levels (transactions) belonging to the B-level (debit).

Figure 5: Basic message structure for the "pain.001" XML message

In the following ***technical specifications*** for the XML message Customer Credit Transfer Initiation (pain.001), each of these message levels is discussed in a separate sub-section:

- 2.3.1 "Group Header (GrpHdr, A-Level)"
- 2.3.2 "Payment Information (PmtInf, B-Level)"
- 2.3.3 "Credit Transfer Transaction Information (CdtTrfTxInf, C-Level)"

The ***business specifications*** given in section 2.4 cover the following topics:

- character set
- references
- sender identification
- duplicate checking

2.2 Payment types

The definitions for the following payment types are based on the definitions of transactions given in the Swiss Business Rules [6]. The definition covers all current possible payment types in Switzerland (national, cross-border, SEPA, etc.).

2.2.1 Procedure for the validation by the financial institution

For each pain.001 transaction, the first step is to check the payment type of this transaction (see Swiss Business Rules [6]). In order to identify the payment type, certain key elements are analysed.

Once the payment type has been identified, the data is validated against the specifications for that payment type as given in the Swiss Implementation Guidelines (this document). The response to any discrepancies may vary from one financial institution to another. For example, if an element is filled in which, according to these definitions, should not be there, then one of the financial institutions can reject the transaction. A different financial institution may implement more complex validation procedures and come to the conclusion that it will process the transaction anyway and will disregard the data in the element in question.

Step 1: Assigning the transaction to a payment type (or "Identifying the payment type")

(See also the tables in section 2 "Business transactions" of the Swiss Business Rules [6] where the payment types are numbered.)

Payment types can only be assigned on the basis of the information given in black below. Fields given in blue do not need to be checked for the purpose of pure assigning to a transaction type.

Domestic

Payment type	1	2.1	2.2	3	4
Title	ISR	IS 1-stage	IS 2-stage	IBAN/postal account and BC/BIC	Foreign currency
Comment		beneficiary's postal account	beneficiary's IBAN or bank account		
Payment Method	TRF/TRA	TRF/TRA	TRF/TRA	TRF/TRA	TRF/TRA
Local Instrument	CH01	CH02	CH03	Must not be delivered	Must not be delivered
Service Level	Must not be SEPA	Must not be SEPA	Must not be SEPA	Must not be SEPA	Must not be SEPA
Creditor Account	ISR participation number	Postal account	IBAN (or bank account) or code line	IBAN or postal account or bank account	IBAN or postal account or bank account
Creditor Agent	Must not be delivered	Must not be delivered	V1: BC V2: BC and postal account of bank V3: Postal account of bank and name of bank	V1: BC V2: Domestic BIC	V1: Domestic BIC V2: BC and name and address FI V3: Name and address domestic FI
Currency	CHF/EUR	CHF/EUR	CHF/EUR	CHF/EUR	All except CHF/EUR

Table 3: Domestic payment types

Foreign

Payment type	5	6
Title	Foreign SEPA	Foreign
Comment		
Payment Method	TRF/TRA	TRF/TRA
Local Instrument	Must not be delivered	Must not be delivered
Service Level	SEPA	Must not be SEPA
Creditor Account	IBAN	IBAN or account
Creditor Agent	BIC	V1: BIC International V2: Bank code (without BC) and name and address of FI V3: Name and address of FI International
Currency	EUR	all*

Table 4: Foreign payment types

Payments not involving a financial institution (domestic and foreign)

Payment type	7	8
Title	Domestic postal orders	Bank cheque/Postcash domestic and foreign**
Comment		
Payment Method	CHK	CHK
Local Instrument	CPP	empty
Service Level	Must not be SEPA	Must not be SEPA
Creditor Account	Must not be delivered	Must not be delivered
Creditor Agent	Must not be delivered	Must not be delivered
Currency	CHF	all*

Table 5: Payment types not involving a financial institution (domestic and foreign)

Notes:

* The actual range of currencies that are supported is to be clarified with the respective financial institution.

** Not all financial institutions support check payments. The range of payment types that is supported should be agreed with the institution concerned.

Step 2: Validation of the transaction by payment type

Once the payment type has been identified, all the other elements are validated according to the Swiss Implementation Guidelines (this document). Example: for payment type 1, checks include whether the "Creditor Account" element contains an ISR reference number and the elements for "Creditor Agent" are non-existent. Depending on the scope of the logic that is implemented, a variation from the definitions in this document may lead to the transaction being rejected or, in some cases with certain institutions, to the elements which are present, but should not be, being ignored and the processing of the transaction continuing.

2.2.2 Look ahead to "Payment slip with QR code" (with effect from 2018)

Today's red and orange payment slips in all versions are due to be replaced by a payment slip with QR code (IS with QR code) or with reference number and QR code (ISR with QR code). The replacement starts probably about mid-2018 and shall be terminated about mid-2020 (for exact dates see www.migration-zv.ch). Banks will then be able to handle invoices from their customers using the new processing method involving the "pain.001" message. Creditors who are corporate customers will be able to convert to the payment slip with QR code during a parallel phase of operations. It is also envisaged that "camt" messages will be used for notifications (payment credits).

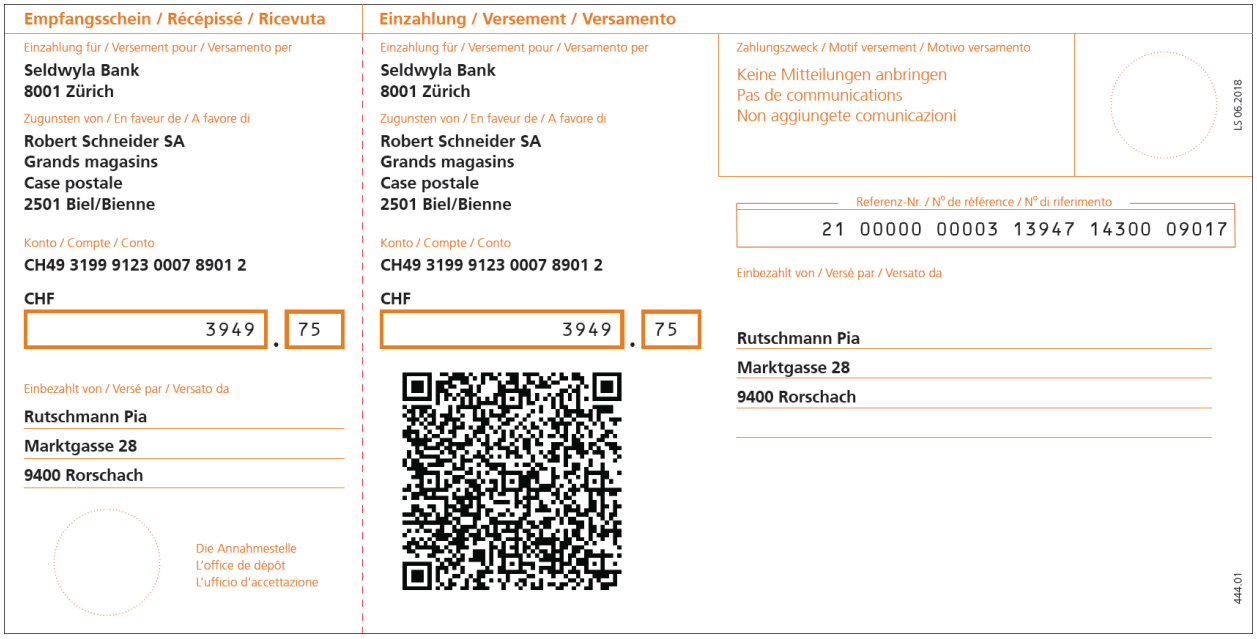

Figure 6: Prototype of the payment slip with reference number and QR code (ISR with QR code)

The payment slip with QR code will replace the existing payment type 1 (ISR) by the payment type E1 and the payment type 2.1 (IS 1-stage) by the payment type E2, while the payment type 2.2 (IS 2-stage) will no longer be used. In place of payment types 1 and 2.1, the data from the payment slip with QR code will be shown in the "pain.001" using the new payment types E1 and E2.

Domestic

Payment type	E1	E2
Title	Procedure with reference: payment slip with reference number and QR code	Procedure with notification: payment slip with QR code
Comment	Either ISR reference or ISO reference (Creditor Reference, ISO 11649)	Information given in the purpose of payment
Payment Method	TRF/TRA	TRF/TRA
Local Instrument	CHE1	CHE2
Service Level	Must not be SEPA	Must not be SEPA
Creditor Account	ESR-IBAN	IBAN
Creditor Agent	Must not be sent (Creditor Agent is derived from the Creditor Account IBAN)	Must not be sent (Creditor Agent is derived from the Creditor Account IBAN)

Payment type	E1	E2
Currency	CHF/EUR	CHF/EUR

Table 6: Domestic payment types for the Payment slip with QR code

Note: These payment types are not currently supported by the financial institutions.

Data scanned from the QR code (data code) or recorded via e-banking will be transferred to the "pain.001" message as follows:

Data in the QR code of the payment slip with QR code						ISO 20022 pain.001
Index	**Name**	**St.**	**Size**	**n/an**	**Definition**	**Element in pain.001**
1	Version	M	4-4	an	Comprises the version of the specification that was used at the time when the QR code was created (IG incl. sample of dimensions and design). The version number increases by the two right-aligned numbers.	
2	IBAN / ESR-IBAN	M	18-34	an	IBAN or ISR-IBAN of the ultimate creditor. Each ultimate creditor participating in the procedure will have either an IBAN, for the procedure with notification, and/or an ISR-IBAN, for the procedure using a reference.	2.80 Creditor Account – IBAN Note: The creditor agent is derived from the BC number in the IBAN.
3	Ultimate creditor	M	1-35	an	Name of the ultimate creditor Note: this always refers to the account holder	2.79 Creditor – Name
		M	1-10	an	Post code of the ultimate creditor	2.79 Creditor – Post Code
		M	1-25	an	Location of the ultimate creditor (town)	2.79 Creditor – Town Name
		M	2-2	an	Country of the ultimate creditor	2.79 Creditor – Country
4	Amount	O	0-11	n	Amount of transfer	2.43 Instructed Amount
5	Currency	M	3-3	an	Currency of transfer	2.43 Instructed Amount
6	Debtor	O	0-35	an	Name of debtor	2.70 Ultimate Debtor – Name
		O	0-30	an	Street name of debtor	2.70 Ultimate Debtor – Street Name
		O	0-5	an	Building number of debtor	2.70 Ultimate Debtor – Building Number
		O	0-10	an	Post code of debtor	2.70 Ultimate Debtor – Post Code
		O	0-25	an	Location of debtor (town)	2.70 Ultimate Debtor – Town Name
		O	0/2	an	Country of debtor	2.70 Ultimate Debtor – Country
7	Reference number	D	0-27	an	The reference number can only be used in procedures with reference number. Note: the reference number is either an ISR reference or a Creditor Reference (ISO 11649)	2.126 Remittance Information – Reference
8	Purpose	D	0-140	an	Notification of the purpose of the payment can only be used in procedures with notification.	2.99 Remittance Information – unstructured

Data in the QR code of the payment slip with QR code						ISO 20022 pain.001
Index	**Name**	**St.**	**Size**	**n/an**	**Definition**	**Element in pain.001**
9	Execution date	O	0/8	n	Latest date by which the creditor requires payment to be executed (according to the terms of payment).	
10	Customer part	O	0-35	an	The field content can be freely defined by the issuer of the invoice (e.g. for controlling dispatch or printing). It is used only for the invoice-issuer's internal processes. The content of the field is not used in the payment credit transfer (pain.001).	
						Debtor's payment reference (2.1 Payment Information Identification)
						2.17 Requested Execution Date
						2.19 Debtor
						2.20 Debtor Account
						2.21 Debtor Agent
						Reference of the single payment (2.29 Instruction Identification)
						Debtor's reference (End To End Identification)

Table 7: Transfer of data from the QR code to the "pain.001" message

Remarks about the individual columns

Status (St.)	M = Mandatory, O = Optional, D = Dependent (dependent on another field)
Size	The size is defined as the possible number of characters (e.g. 1-40) in the data element.
	If only certain values are possible, this is shown, for example, as follows: 6/8 (field must contain either 6 or 8 characters).
	3-3 indicates that exactly 3 characters must be present.
	Size 0 is only permitted for optional fields and means that no value is present (blank field).
n/an	n = numerical content, an = alphanumerical content

2.3 Technical specifications

2.3.1 Group Header (GrpHdr, A-Level)

The Group Header (A-Level of the message) contains all the elements that apply to all the transactions in the Customer Credit Transfer Initiation (pain.001) XML message. It occurs exactly once in the message.

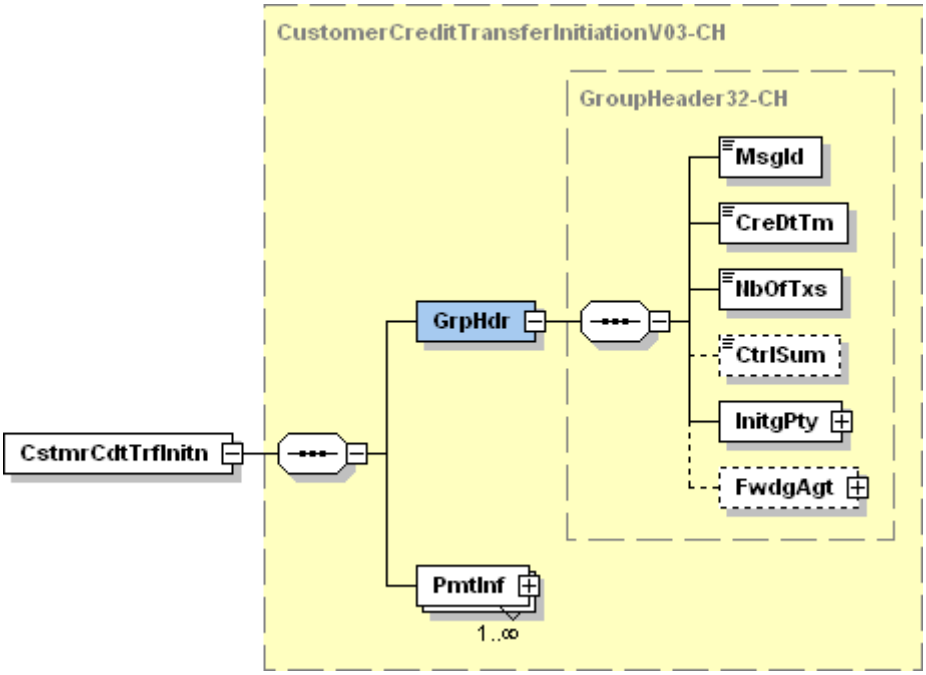

Figure 7: Group Header (GrpHdr)

The following table specifies all the elements of the Group Header that are relevant to the Swiss ISO 20022 Payments Standard.

ISO 20022 Standard				Swiss ISO 20022 Payments Standard			
Index	**Message Item**	**XML Tag**	**Mult.**	**St.**	**General Definition**	**Payment Type-specific Definition**	**Error**
	Document +Customer Credit Transfer Initiation V03	CstmrCdtTrfInitn	1..1	M			
1.0	Group Header	GrpHdr	1..1	M			
1.1	Group Header +Message Identification	MsgId	1..1	M	Checking for duplicates usually takes place at the Swiss financial institutions at document (message) level. This is why the "Message Identification" <MsgId> element must have a unique value. The uniqueness is checked by most of the financial institutions over a period of at least 90 days. It is recommended that the "Message Identification" is generally kept unique for as long as possible. Only the SWIFT character set is permitted for this element (see section 2.4.1).		DU01
1.2	Group Header +Creation Date Time	CreDtTm	1..1	M	Recommendation: Should be the same as the actual date/time of creation.		DT01
1.6	Group Header +Number Of Transactions	NbOfTxs	1..1	M	Number of transactions for all C-Levels (Credit Transfer Transaction Information) in the whole message. If there is an error, the whole message is rejected. Recommendation: at present, the customer is recommended not to send any messages (files) to the financial institution exceeding 99,999 payments (C-Level, transactions).		AM18
1.7	Group Header +Control Sum	CtrlSum	0..1	R	Value is the same as the sum of all the "Amount elements" ("Instructed Amount" or "Equivalent Amount") (2.42) Recommendation: the control sum should be sent in this element in Level A. If there is an error, the whole message is rejected.		AM10
1.8	Group Header +Initiating Party	InitgPty	1..1	M	At least one of the two elements "Name" or "Identification" must be sent.		
1.8	Group Header +Initiating Party ++Name	Nm	0..1	R	Name of the message sender, maximum 70 characters.		
1.8	Group Header +Initiating Party ++Identification	Id	0..1	R	Identification of the message sender.		
1.8	Group Header +Initiating Party ++Identification +++Organisation Identification	OrgId {Or	1..1	D	Only "BIC Or BEI" or an element from "Other" permitted. If used, the "Private Identification" must not be present.		
1.8	Group Header +Initiating Party ++Identification +++Organisation Identification ++++BICOr BEI	BICOrBEI	0..1	D	If used, "Other" must not be present.		RC01, CH16

ISO 20022 Standard				Swiss ISO 20022 Payments Standard			
Index	**Message Item**	**XML Tag**	**Mult.**	**St.**	**General Definition**	**Payment Type-specific Definition**	**Error**
1.8	Group Header +Initiating Party ++Identification +++Organisation Identification ++++Other	Othr	0..n	D	If used, "BIC Or BEI" must not be present.		CH16
1.8	Group Header +Initiating Party ++Identification +++Private Identification	PrvtId Or}	1..1	D	Only "Date And Place Of Birth" or an element from "Other" permitted. If used, "Organisation Identification" must not be present.		
1.8	Group Header +Initiating Party ++Contact Details	CtctDtls	0..1	R	Details of the software used and the particular version.		
1.8	Group Header +Initiating Party ++Contact Details +++Name	Nm	0..1	O	Recommendation: Should contain the name of the software used to create this message, maximum 70 characters.		
1.8	Group Header +Initiating Party ++Contact Details +++Other	Othr	0..1	O	Recommendation: Should contain the version of the software used to create this message.		
1.9	Group Header +Forwarding Agent	FwdgAgt	0..1	O	Only to be used by agreement with the financial institution.		

Table 8: Group Header (GrpHdr, A-Level)

2.3.2 Payment Information (PmtInf, B-Level)

The Payment Information (B-Level of the message) contains information about the debtor and other key elements such as the payment method or requested execution date which apply to all transactions (C-Levels) for this B-Level.

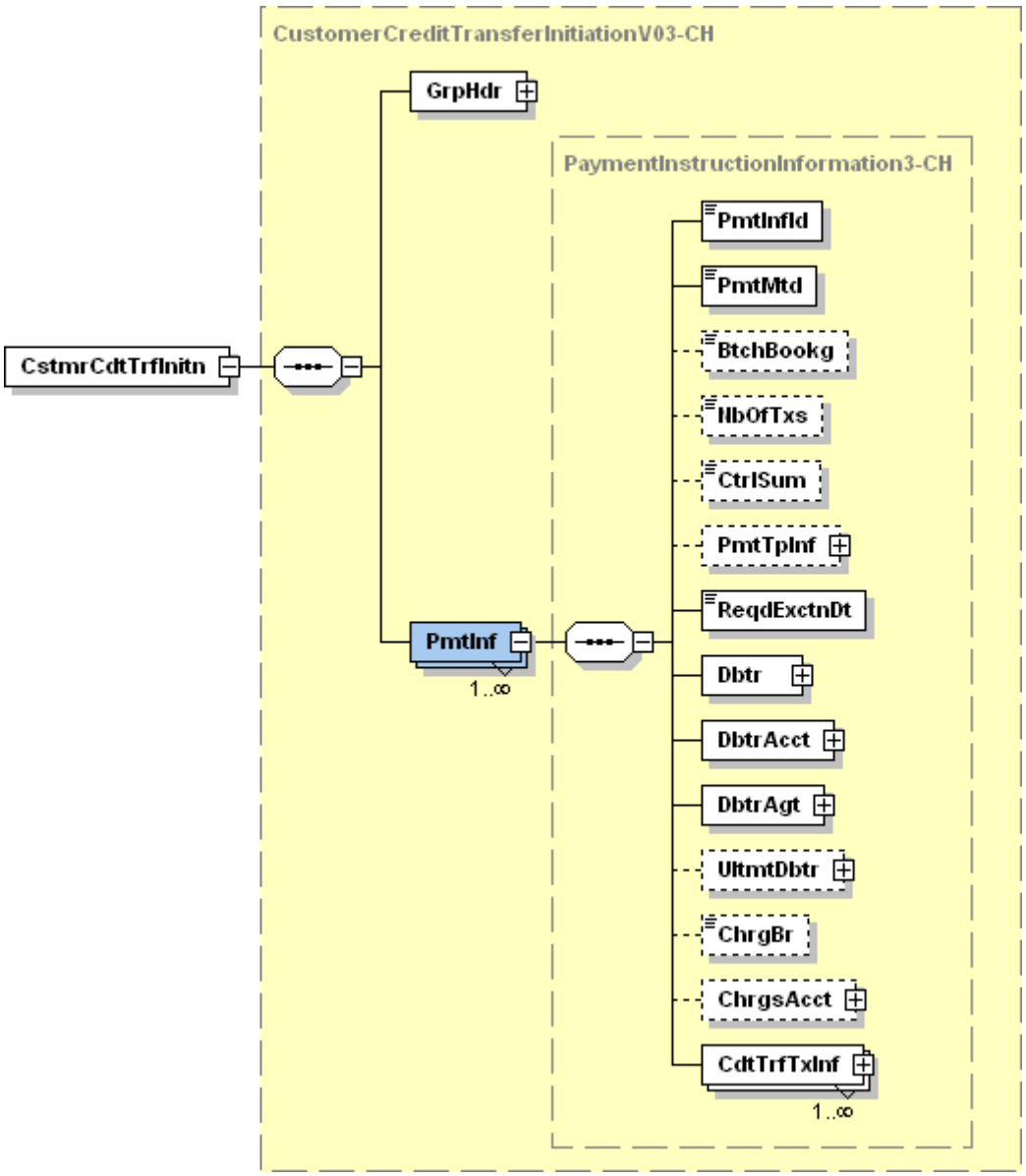

Figure 8: Payment Information (PmtInf)

The following table specifies all the elements of the Payment Information that are relevant to the Swiss ISO 20022 Payments Standard.

ISO 20022 Standard				Swiss ISO 20022 Payments Standard			
Index	**Message Item**	**XML Tag**	**Mult.**	**St.**	**General Definition**	**Payment Type-specific Definition**	**Error**
2.0	Payment Information	PmtInf	1..n	M			
2.1	Payment Information +Payment Information Identification	PmtInfId	1..1	M	Value must be unique within the whole message (is used as reference in the Status Report "pain.002"). Only the SWIFT character set is permitted for this element (see section 2.4.1).		DU02
2.2	Payment Information +Payment Method	PmtMtd	1..1	M	"TRA" and "TRF": same meaning, no effect on the way the debit advices are controlled. In Switzerland the "TRA" value is processed in the same way as the "TRF" value, it has no special function. Furthermore, for check payments and payment instructions (postal mandates), the "CHK" value is permitted.	Type 1, 2.1, 2.2, 3, 4, 5, 6, E1, E2: May only contain "TRA" or "TRF". Type 7, 8: May only contain "CHK".	
2.3	Payment Information +Batch Booking	BtchBookg	0..1	O	The option "true" is recommended. "true": Wherever possible, one batch booking is made per "Payment Information" (B). It is recommended that one B-level is created for each currency transferred. Mixed B-Levels are grouped by the financial institution according to their currency and sometimes other criteria (e.g. charging options). The booking is identified using the Payment Information Identification (B). "false": One booking should be made for each "Credit Transfer Transaction Information" (C). Bookings are usually identified by the "Payment Identification" (C). Alternatively, the financial institution can also identify the booking using, for example, the "Payment Information Identification" (B) element. If this element is not sent, then the booking proceeds as for "true".		
2.4	Payment Information +Number Of Transactions	NbOfTxs	0..1	O	Not generally checked by Swiss institutions. Checking uses the corresponding element at A-Level.		
2.5	Payment Information +Control Sum	CtrlSum	0..1	O	Not generally checked by Swiss institutions. Checking uses the corresponding element at A-Level.		
2.6	Payment Information +Payment Type Information	PmtTpInf	0..1	O	Can be used at B-Level or C-Level but not at both at the same time.	Type 5, 7: Use at B-Level is recommended. Type 1, 2.1, 2.2, E1, E2: Use at C-Level is recommended.	CH07
2.7	Payment Information +Payment Type Information ++Instruction Priority	InstrPrty	0..1	O	Only to be used by agreement with the financial institution. For normal handling, the element can be omitted. The code HIGH equates to the current Express handling. Any details about the Express processing should be sent at B-Level, because values at C-Level are ignored.		
2.8	Payment Information +Payment Type Information ++Service Level	SvcLvl	0..1	O	Service Level affects the way payment is made at the financial institution. The focus is on achieving the fastest possible credit for the creditor.	Type 5: Use is recommended.	

ISO 20022 Standard				Swiss ISO 20022 Payments Standard			
Index	**Message Item**	**XML Tag**	**Mult.**	**St.**	**General Definition**	**Payment Type-specific Definition**	**Error**
2.9	Payment Information +Payment Type Information ++Service Level +++Code	Cd {Or	1..1	D	Codes according "Payments External Code Lists" [7]. The following values will be accepted by the financial institutions: • SEPA (Single Euro Payments Area) • PRPT (EBA Priority Service) • SDVA (Same Day Value) • URGP (Urgent Payment) Other values from the external code list only to be used by agreement with the financial institution. If used, then "Proprietary" must not be present.	Type 5: Must be used if "Service Level" is used, only "SEPA" permitted.	CH16
2.10	Payment Information +Payment Type Information ++Service Level +++Proprietary	Prtry Or}	1..1	D	Only to be used by agreement with the financial institution. If used, then "Code" must not be present.	Type 5: Must not be used.	CH17
2.11	Payment Information +Payment Type Information ++Local Instrument	LclInstrm	0..1	D		Type 1, 2.1, 2.2, 7, E1, E2: Must be used.	CH21
2.12	Payment Information +Payment Type Information ++Local Instrument +++Code	Cd {Or	1..1	D	Codes according "Payments External Code Lists" [7]. If used, then "Proprietary" must not be present.	Type 7: "CPP" must be used in combination with "PmtMtd" = "CHK".	CH16, CH17
2.13	Payment Information +Payment Type Information ++Local Instrument +++Proprietary	Prtry Or}	1..1	D	If used, then "Code" must not be present.	Type 1: "CH01" must be used. Type 2.1: "CH02" must be used. Type 2.2: "CH03" must be used. Type E1: "CHE1" must be used. Type E2: "CHE2" must be used. Each in combination with "PmtMtd" = "TRF"/"TRA".	CH16, CH17
2.14	Payment Information +Payment Type Information ++Category Purpose	CtgyPurp	0..1	O	Gives information about the purpose of the payment order.		
2.15	Payment Information +Payment Type Information ++Category Purpose +++Code	Cd	1..1	M	Codes according "Payments External Code Lists" [7]. Recommendation: Code "SALA" or "PENS" when required must always be sent at B-Level. Must be used if "Category Purpose" is used.		CH16
2.17	Payment Information +Requested Execution Date	ReqdExctnDt	1..1	M	Contains the required date of execution. Where appropriate, the value data is automatically modified to the next possible banking/Post Office working day.		DT01, CH03, CH04, DT06
2.19	Payment Information +Debtor	Dbtr	1..1	M	The debtor is only identified by the "Debtor Account" element. Information in the "Debtor" field will be ignored. What is required is the master data for the financial institution for this debtor.		

ISO 20022 Standard				Swiss ISO 20022 Payments Standard			
Index	**Message Item**	**XML Tag**	**Mult.**	**St.**	**General Definition**	**Payment Type-specific Definition**	**Error**
2.19	Payment Information +Debtor ++Name	Nm	0..1	R	Recommendation: Use, maximum 70 characters.		
2.19	Payment Information +Debtor ++Postal Address	PstlAdr	0..1	O	Recommendation: Do not use.		
2.19	Payment Information +Debtor ++Identification	Id	0..1	O	Recommendation: Do not use.		
2.19	Payment Information +Debtor ++Identification +++Organisation Identification	OrgId {Or	1..1	D	Only "BIC Or BEI" or an element from "Other" permitted. If used, the "Private Identification" must not be present.		
2.19	Payment Information +Debtor ++Identification +++Private Identification	PrvtId Or}	1..1	D	Only "Date And Place Of Birth" or an element from "Other" permitted. If used, "Organisation Identification" must not be present.		
2.20	Payment Information +Debtor Account	DbtrAcct	1..1	M	Recommendation: IBAN should be used. However, "Other" is also permitted for the proprietary account number. The "Type/Proprietary" element can also be used to define the way the debit advice is controlled.		
2.20	Payment Information +Debtor Account ++Identification	Id	1..1	M			
2.20	Payment Information +Debtor Account ++Identification +++IBAN	IBAN {Or	1..1	R	Recommendation: Use. If used, "Other" must not be present.		BE09, CH16, AC01
2.20	Payment Information +Debtor Account ++Identification +++Other	Othr Or}	1..1	D	If used, then "IBAN" must not be present.		CH17
2.20	Payment Information +Debtor Account ++Identification +++Other ++++Identification	Id	1..1	M	Proprietary bank or postal account number. Must be used if "Other" is used.		CH16, CH17, AC01
2.20	Payment Information +Debtor Account ++Type	Tp	0..1	O			

ISO 20022 Standard				Swiss ISO 20022 Payments Standard			
Index	**Message Item**	**XML Tag**	**Mult.**	**St.**	**General Definition**	**Payment Type-specific Definition**	**Error**
2.20	Payment Information +Debtor Account ++Type +++Code	Cd {Or	1..1	D	Only to be used by agreement with the financial institution. If used, then "Proprietary" must not be present.		
2.20	Payment Information +Debtor Account ++Type +++Proprietary	Prtry Or}	1..1	D	Can be used to control the debit advice. The following options are available: • NOA No Advice • SIA Single Advice • CND Collective Advice No Details • CWD Collective Advice With Details If used, then "Code" must not be present.		CH16
2.20	Payment Information +Debtor Account ++Currency	Ccy	0..1	O	Recommendation: Do not use.		
2.21	Payment Information +Debtor Agent	DbtrAgt	1..1	M	The Swiss financial institutions recommend entering the BIC or bank clearing number (BC) in this element.		
2.21	Payment Information +Debtor Agent ++Financial Institution Identification	FinInstnId	1..1	M			
2.21	Payment Information +Debtor Agent ++Financial Institution Identification +++BIC	BIC	0..1	D	BIC of the Debtor Bank. If used, then "Clearing System Member Identification" must not be present.		RC01, AGNT
2.21	Payment Information +Debtor Agent ++Financial Institution Identification +++Clearing System Member Identification	ClrSysMmbId	0..1	D	If used, then "BIC" must not be present.		
2.21	Payment Information +Debtor Agent ++Financial Institution Identification +++Clearing System Member Identification ++++Clearing System Identification	ClrSysId	0..1	O			
2.21	Payment Information +Debtor Agent ++Financial Institution Identification +++Clearing System Member Identification ++++Clearing System Identification +++++Code	Cd {Or	1..1	D	Codes according "Payments External Code Lists" [7]. Only "CHBCC" is permitted in Switzerland. If used, then "Proprietary" must not be present.		CH16

ISO 20022 Standard				Swiss ISO 20022 Payments Standard			
Index	**Message Item**	**XML Tag**	**Mult.**	**St.**	**General Definition**	**Payment Type-specific Definition**	**Error**
2.21	Payment Information +Debtor Agent ++Financial Institution Identification +++Clearing System Member Identification ++++Clearing System Identification +++++Proprietary	Prtry Or}	1..1	D	Recommendation: Do not use. If used, then "Code" must not be present.		CH16
2.21	Payment Information +Debtor Agent ++Financial Institution Identification +++Clearing System Member Identification ++++Member Identification	MmbId	1..1	M	BC number of the Debtor Agent Must be used if "Clearing System Member Identification" is used.		RC01, AGNT
2.23	Payment Information +Ultimate Debtor	UltmtDbtr	0..1	O	Usually not used. Can be used at B-Level or C-Level but not at both at the same time.		
2.23	Payment Information +Ultimate Debtor ++Name	Nm	0..1	O	Maximum 70 characters		
2.23	Payment Information +Ultimate Debtor ++Postal Address	PstlAdr	0..1	O	This information is structured and defined in the same way as the definitions for the Creditor (Index 2.79).	Type 5: Is not forwarded in interbank traffic.	
2.23	Payment Information +Ultimate Debtor ++Identification	Id	0..1	O	Recommendation: Do not use.		
2.23	Payment Information +Ultimate Debtor ++Identification +++Organisation Identification	OrgId {Or	1..1	D	Only "BIC Or BEI" or an element from "Other" permitted. If used, the "Private Identification" must not be present.		
2.23	Payment Information +Ultimate Debtor ++Identification +++Private Identification	PrvtId Or}	1..1	D	Only "Date And Place Of Birth" or an element from "Other" permitted. If used, "Organisation Identification" must not be present.		
2.24	Payment Information +Charge Bearer	ChrgBr	0..1	D	Can be used at B-Level or C-Level but not at both at the same time. Permitted codes are: • DEBT Borne by Debtor (ex OUR) • CRED Borne by Creditor (ex BEN) • SHAR Shared (ex. SHA) • SLEV Service Level	Type 5: If used, then "SLEV" must be used.	CH16
2.25	Payment Information +Charges Account	ChrgsAcct	0..1	O	Not normally used, in this case any charges are made to the "Debtor Account".		
2.25	Payment Information +Charges Account ++Identification	Id	1..1	M	Must be used if "Charges Account" is used.		

ISO 20022 Standard				Swiss ISO 20022 Payments Standard			
Index	**Message Item**	**XML Tag**	**Mult.**	**St.**	**General Definition**	**Payment Type-specific Definition**	**Error**
2.25	Payment Information +Charges Account ++Identification +++IBAN	IBAN {Or	1..1	R	Use of "IBAN" recommended. If used, "Other" must not be present.		AC01
2.25	Payment Information +Charges Account ++Identification +++Other	Othr Or}	1..1	D	If used, then "IBAN" must not be present.		
2.25	Payment Information +Charges Account ++Identification +++Other ++++Identification	Id	1..1	M	Proprietary bank or postal account number. Must be used if "Other" is used.		AC01
2.25	Payment Information +Charges Account ++Currency	Ccy	0..1	O	Recommendation: do not use.		

Table 9: Payment Information (PmtInf, B-Level)

2.3.3 Credit Transfer Transaction Information (CdtTrfTxInf, C-Level)

The Credit Transfer Transaction Information (C-Level of the message) contains all the information about the beneficiary and further information about the transaction (transmission information, purpose of payment etc.).

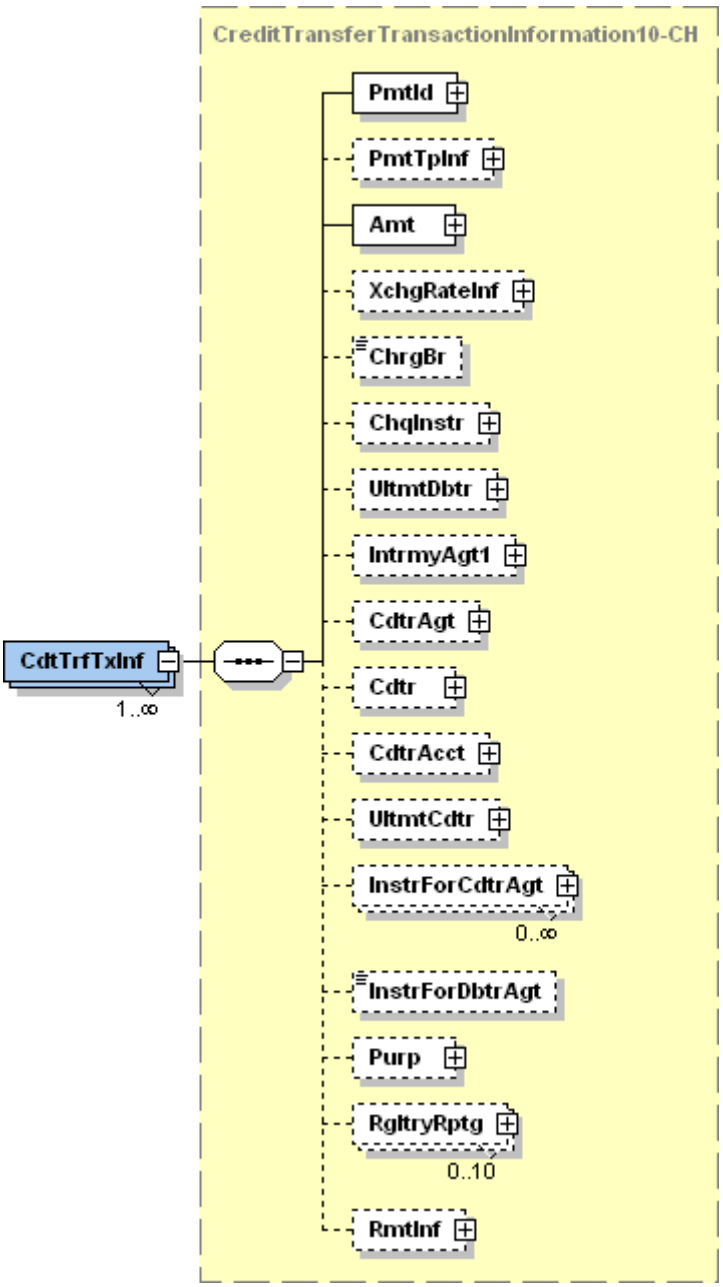

Figure 9: Credit Transfer Transaction Information (CdtTrfTxInf)

The following table specifies all the elements of the Credit Transfer Transaction Information that are relevant to the Swiss ISO 20022 Payments Standard.

ISO 20022 Standard				Swiss ISO 20022 Payments Standard			
Index	**Message Item**	**XML Tag**	**Mult.**	**St.**	**General Definition**	**Payment Type-specific Definition**	**Error**
2.27	Credit Transfer Transaction Information	CdtTrfTxInf	1..n	M			
2.28	Credit Transfer Transaction Information +Payment Identification	PmtId	1..1	M			
2.29	Credit Transfer Transaction Information +Payment Identification ++Instruction Identification	InstrId	0..1	R	Recommendation: Should be used and be unique within the B-Level. Only the SWIFT character set is permitted for this element (see section 2.4.1).		DU05, CH21
2.30	Credit Transfer Transaction Information +Payment Identification ++End To End Identification	EndToEndId	1..1	M	Customer reference, normally forwarded as far as the beneficiary. Only the SWIFT character set is permitted for this element (see section 2.4.1).	Type 1, E1: There is no forwarding to the beneficiary.	
2.31	Credit Transfer Transaction Information +Payment Type Information	PmtTpInf	0..1	D	Can be used at B-Level or C-Level but not at both at the same time.	Type 5, 7: Use at B-Level is recommended. Type 1, 2.1, 2.2, E1, E2: Use at C-Level is recommended.	CH21
2.32	Credit Transfer Transaction Information +Payment Type Information ++Instruction Priority	InstrPrty	0..1	O	Any information about the Express processing should be sent at B-Level, values in this element are ignored.	Type 5: Must not be used.	
2.33	Credit Transfer Transaction Information +Payment Type Information ++Service Level	SvcLvl	0..1	O	Service Level affects the way payment is made at the financial institution. The focus is on achieving the fastest possible credit for the creditor.	Type 5: Use is recommended.	
2.34	Credit Transfer Transaction Information +Payment Type Information ++Service Level +++Code	Cd {Or	1..1	D	Codes according "Payments External Code Lists" [7]. The following values will be accepted by the financial institutions: • SEPA (Single Euro Payments Area) • PRPT (EBA Priority Service) • SDVA (Same Day Value) • URGP (Urgent Payment) Other values from the external code list only to be used by agreement with the financial institution. If used, then "Proprietary" must not be present.	Type 5: Must be used if "Service Level" is used, only "SEPA" permitted.	CH16
2.35	Credit Transfer Transaction Information +Payment Type Information ++Service Level +++Proprietary	Prtry Or}	1..1	D	Only to be used by agreement with the financial institution. If used, then "Code" must not be present.	Type 5: Must not be used.	CH17
2.36	Credit Transfer Transaction Information +Payment Type Information ++Local Instrument	LclInstrm	0..1	D		Type 1, 2.1, 2.2, 7, E1, E2: Must be used.	CH21
2.37	Credit Transfer Transaction Information +Payment Type Information ++Local Instrument +++Code	Cd {Or	1..1	D	Codes according "Payments External Code Lists" [7]. If used, then "Proprietary" must not be present.	Type 7: "CPP" must be used in combination with "PmtMtd" = "CHK".	CH16, CH17

ISO 20022 Standard				Swiss ISO 20022 Payments Standard			
Index	**Message Item**	**XML Tag**	**Mult.**	**St.**	**General Definition**	**Payment Type-specific Definition**	**Error**
2.38	Credit Transfer Transaction Information +Payment Type Information ++Local Instrument +++Proprietary	Prtry Or}	1..1	D	If used, then "Code" must not be present.	Type 1: "CH01" must be used. Type 2.1: "CH02" must be used. Type 2.2: "CH03" must be used. Type E1: "CHE1" must be used. Type E2: "CHE2" must be used. Each in combination with "PmtMtd" = "TRF"/"TRA".	CH16, CH17
2.39	Credit Transfer Transaction Information +Payment Type Information ++Category Purpose	CtgyPurp	0..1	O	Any information about the purpose of the payment order should be sent at B-Level, values in this element are ignored.		
2.42	Credit Transfer Transaction Information +Amount	Amt	1..1	M	Either as "Instructed Amount" or "Equivalent Amount". It is recommended to create one B-Level for each currency transferred.		
2.43	Credit Transfer Transaction Information +Amount ++Instructed Amount	InstdAmt {Or	1..1	D	Amount must be 0.01 or more and 999999999.99 or less. If used, then "Equivalent Amount" must not be present.	Type 1, 2.1, 2.2, 3, E1, E2: Must contain "CHF" or "EUR". Type 4: All currencies except "CHF" and "EUR" permitted. Type 5: Must contain "EUR". Type 7: Must contain "CHF". Type E1, E2: From QR Code Index 4 and 5, if present.	AM01, AM02, CURR, AM03, CH20
2.44	Credit Transfer Transaction Information +Amount ++Equivalent Amount	EqvtAmt Or}	1..1	D	Only to be used by agreement with the financial institution. If used, then "Instructed Amount" must not be present.	Type 1, 2.1, 2.2, E1, E2: Must not be used.	CH17
2.45	Credit Transfer Transaction Information +Amount ++Equivalent Amount +++Amount	Amt	1..1	M	Amount must be 0.01 or more and 999999999.99 or less. Must be used if "Equivalent Amount" is used.		AM01, AM02, CURR, AM03, CH20
2.46	Credit Transfer Transaction Information +Amount ++Equivalent Amount +++Currency Of Transfer	CcyOfTrf	1..1	M	Must be used if "Equivalent Amount" is used.		CURR, AM03
2.47	Credit Transfer Transaction Information +Exchange Rate Information	XchgRateInf	0..1	O	Exchange rate Only to be used by agreement with the financial institution.	Type 5: Must not be used.	CH17
2.51	Credit Transfer Transaction Information +Charge Bearer	ChrgBr	0..1	O	Can be used at B-Level or C-Level but not at both at the same time. Zulässige Codes sind: • DEBT Borne by Debtor (ex OUR) • CRED Borne by Creditor (ex BEN) • SHAR Shared (ex. SHA) • SLEV Service Level	Type 5: If used then "SLEV" must be used.	CH07, CH16
2.52	Credit Transfer Transaction Information +Cheque Instruction	ChqInstr	0..1	D	May only be used in combination with "PmtMtd" = "CHK".	Type 1, 2.1, 2.2, 3, 4, 5, 6, E1, E2: Must not be used.	CH17

ISO 20022 Standard				Swiss ISO 20022 Payments Standard			
Index	**Message Item**	**XML Tag**	**Mult.**	**St.**	**General Definition**	**Payment Type-specific Definition**	**Error**
2.53	Credit Transfer Transaction Information +Cheque Instruction ++Cheque Type	ChqTp	0..1	O			
2.58	Credit Transfer Transaction Information +Cheque Instruction ++Delivery Method	DlvryMtd	0..1	O			
2.59	Credit Transfer Transaction Information +Cheque Instruction ++Delivery Method +++Code	Cd {Or	1..1	D	If used, then "Proprietary" must not be present.		
2.60	Credit Transfer Transaction Information +Cheque Instruction ++Delivery Method +++Proprietary	Prtry Or}	1..1	D	If used, then "Code" must not be present.		
2.70	Credit Transfer Transaction Information +Ultimate Debtor	UltmtDbtr	0..1	O	Usually not used. Can be used at B-Level or C-Level but not at both at the same time.	Type E1, E2: From QR Code Index 6, if present.	CH07
2.70	Credit Transfer Transaction Information +Ultimate Debtor ++Name	Nm	0..1	O	Maximum 70 characters	Type E1, E2: From QR Code Index 6, if present.	
2.70	Credit Transfer Transaction Information +Ultimate Debtor ++Postal Address	PstlAdr	0..1	O	Simultaneous use of the structured elements <StrtNm> / <BldgNb> / <PstCd> / <TwnNm> and the unstructured element <AdrLine> is not permitted.	Type 5: Is not forwarded in interbank traffic. Type E1, E2: From QR Code Index 6, if present.	
2.70	Credit Transfer Transaction Information +Ultimate Debtor ++Identification	Id	0..1	O	Recommendation: Do not use.		
2.70	Credit Transfer Transaction Information +Ultimate Debtor ++Identification +++Organisation Identification	OrgId {Or	1..1	D	Only "BIC Or BEI" or an element from "Other" permitted. If used, the "Private Identification" must not be present.		
2.70	Credit Transfer Transaction Information +Ultimate Debtor ++Identification +++Private Identification	PrvtId Or}	1..1	D	Only "Date And Place Of Birth" or an element from "Other" permitted. If used, "Organisation Identification" must not be present.		
2.71	Credit Transfer Transaction Information +Intermediary Agent 1	IntrmyAgt1	0..1	O	Only to be used by agreement with the financial institution. If used, generally with BIC.		ED01

ISO 20022 Standard				Swiss ISO 20022 Payments Standard			
Index	**Message Item**	**XML Tag**	**Mult.**	**St.**	**General Definition**	**Payment Type-specific Definition**	**Error**
2.77	Credit Transfer Transaction Information +Creditor Agent	CdtrAgt	0..1	D		Type 1, 2.1, 7, 8, E1, E2: Must not be used. For all other payment types, the "Creditor Agent" must be present. (Type 8: Only after consultation with the financial institution: If the remitter explicitly wants to enter the "bank drawn upon" as the BIC of the "Creditor Agent".)	CH17, CH21
2.77	Credit Transfer Transaction Information +Creditor Agent ++Financial Institution Identification	FinInstnId	1..1	M	Must be used if "Creditor Agent" is used.	Type 2.2: • V1: BC • V2: BC and postal account of the bank • V3: Postal account of the bank and name of the bank Type 3: • V1: BC • V2: BIC Domestic (CH/LI) Type 4: • V1: BIC Domestic (CH/LI) • V2: BC and Name and address of financial institution • V3: Name and address of financial institution Type 5: BIC Type 6: Recommendation: Use BIC. • V1: "BIC International" • V2: Bank code (without BC) and name and address of financial institution • V3: Name and address of financial institution	
2.77	Credit Transfer Transaction Information +Creditor Agent ++Financial Institution Identification +++BIC	BIC	0..1	D	If used, then "Clearing System Member Identification" must not be present.	Type 3(V2), 4(V1): May be present. Type 5: Must be present. Type 6: Must contain "BIC International".	AGNT
2.77	Credit Transfer Transaction Information +Creditor Agent ++Financial Institution Identification +++Clearing System Member Identification	ClrSysMmbId	0..1	D	If used, then "BIC" must not be present.	Type 2.2(V1, V2), 3(V1), 4(V2), 6: May be present. Type 5: Must not be used.	CH17
2.77	Credit Transfer Transaction Information +Creditor Agent ++Financial Institution Identification +++Clearing System Member Identification ++++Clearing System Identification	ClrSysId	0..1	D		Type 6: May be used. Other types: Must be used if "Clearing System Member Identification" is used.	

ISO 20022 Standard				Swiss ISO 20022 Payments Standard			
Index	**Message Item**	**XML Tag**	**Mult.**	**St.**	**General Definition**	**Payment Type-specific Definition**	**Error**
2.77	Credit Transfer Transaction Information +Creditor Agent ++Financial Institution Identification +++Clearing System Member Identification ++++Clearing System Identification +++++Code	Cd {Or	1..1	D	Type of Clearing ID (Bank Code, "National Identifier"). Gives information about the type of identification in the "Member Identification" field. Codes according "Payments External Code Lists" [7]. If used, then "Proprietary" must not be present.	Type 2.2(V1, V2), 3(V1), 4(V2): Must contain "CHBCC". Type 6: If used, it must not contain "CHBCC".	CH16, CH17
2.77	Credit Transfer Transaction Information +Creditor Agent ++Financial Institution Identification +++Clearing System Member Identification ++++Clearing System Identification +++++Proprietary	Prtry Or}	1..1	D	If used, then "Code" must not be present.	Type 1, 2.1, 2.2, 3, 4, 5, 7, 8, E1, E2: Must not be used.	CH17
2.77	Credit Transfer Transaction Information +Creditor Agent ++Financial Institution Identification +++Clearing System Member Identification ++++Member Identification	MmbId	1..1	M	Clearing ID (Bank Code, "National Identifier") of the receiver institution. Must be used if "Clearing System Member Identification" is used.		AGNT
2.77	Credit Transfer Transaction Information +Creditor Agent ++Financial Institution Identification +++Name	Nm	0..1	D	Maximum 70 characters	Type 2.2(V3), 4(V2, V3), 6(V2, V3): Must be present. Other types: Must not be present.	CH17, CH21
2.77	Credit Transfer Transaction Information +Creditor Agent ++Financial Institution Identification +++Postal Address	PstlAdr	0..1	D	Structured if possible. Simultaneous use of the structured elements <StrtNm> / <BldgNb> / <PstCd> / <TwnNm> and the unstructured element <AdrLine> is not permitted.	Type 4(V2, V3), 6(V2, V3): Must be present. Other types: Must not be present.	CH17, CH21
2.77	Credit Transfer Transaction Information +Creditor Agent ++Financial Institution Identification +++Postal Address ++++Address Type	AdrTp	0..1	O	Recommendation: Do not use.		
2.77	Credit Transfer Transaction Information +Creditor Agent ++Financial Institution Identification +++Postal Address ++++Department	Dept	0..1	O	Recommendation: Do not use.		
2.77	Credit Transfer Transaction Information +Creditor Agent ++Financial Institution Identification +++Postal Address ++++Sub Department	SubDept	0..1	O	Recommendation: Do not use.		

ISO 20022 Standard				Swiss ISO 20022 Payments Standard			
Index	**Message Item**	**XML Tag**	**Mult.**	**St.**	**General Definition**	**Payment Type-specific Definition**	**Error**
2.77	Credit Transfer Transaction Information +Creditor Agent ++Financial Institution Identification +++Postal Address ++++Street Name	StrtNm	0..1	R	Recommendation: Use.		
2.77	Credit Transfer Transaction Information +Creditor Agent ++Financial Institution Identification +++Postal Address ++++Building Number	BldgNb	0..1	R	Recommendation: Use.		
2.77	Credit Transfer Transaction Information +Creditor Agent ++Financial Institution Identification +++Postal Address ++++Post Code	PstCd	0..1	R	Recommendation: Use.		
2.77	Credit Transfer Transaction Information +Creditor Agent ++Financial Institution Identification +++Postal Address ++++Town Name	TwnNm	0..1	R	Recommendation: Use.		
2.77	Credit Transfer Transaction Information +Creditor Agent ++Financial Institution Identification +++Postal Address ++++Country Sub Division	CtrySubDvsn	0..1	O	Recommendation: Do not use.		
2.77	Credit Transfer Transaction Information +Creditor Agent ++Financial Institution Identification +++Postal Address ++++Country	Ctry	0..1	R	Recommendation: Use.		AG05
2.77	Credit Transfer Transaction Information +Creditor Agent ++Financial Institution Identification +++Postal Address ++++Address Line	AdrLine	0..7	O	Maximum two lines permitted.		
2.77	Credit Transfer Transaction Information +Creditor Agent ++Financial Institution Identification +++Other	Othr	0..1	D		Type 2.2(V2, V3): Must be present. Other types: Must not be present.	CH17, CH21

ISO 20022 Standard				Swiss ISO 20022 Payments Standard			
Index	**Message Item**	**XML Tag**	**Mult.**	**St.**	**General Definition**	**Payment Type-specific Definition**	**Error**
2.77	Credit Transfer Transaction Information +Creditor Agent ++Financial Institution Identification +++Other ++++Identification	Id	1..1	M	Must be used if "Other" is used.	Type 2.2(V2, V3): Must contain postal account of bank (example: "80-2-2" or "800000022").	AGNT, RC01
2.79	Credit Transfer Transaction Information +Creditor	Cdtr	0..1	D		Type 1: May be present. Type E1, E2: From QR Code (Exception: Neutral slips). Other types: Must be present.	CH21
2.79	Credit Transfer Transaction Information +Creditor ++Name	Nm	0..1	M	Must be used if "Creditor" is used, maximum 70 characters.	Type E1, E2: From QR Code Index 3 (Exception: Neutral slips).	CH21
2.79	Credit Transfer Transaction Information +Creditor ++Postal Address	PstlAdr	0..1	O	If possible structured. Simultaneous use of the structured elements <StrtNm>/<BldgNb>/<PstCd>/<TwnNm> and the unstructured element <AdrLine> is not permitted.	Type 5: It is recommended to use the <Ctry> and <AdrLine> elements. Type 7: Must be structured.	BE01
2.79	Credit Transfer Transaction Information +Creditor ++Postal Address +++Address Type	AdrTp	0..1	O	Recommendation: Do not use.		CH17
2.79	Credit Transfer Transaction Information +Creditor ++Postal Address +++Department	Dept	0..1	O	Recommendation: Do not use.		CH17
2.79	Credit Transfer Transaction Information +Creditor ++Postal Address +++Sub Department	SubDept	0..1	O	Recommendation: Do not use.		CH17
2.79	Credit Transfer Transaction Information +Creditor ++Postal Address +++Street Name	StrtNm	0..1	R	Recommendation: Use.	Type 5: Recommendation: Do not use.	CH17
2.79	Credit Transfer Transaction Information +Creditor ++Postal Address +++Building Number	BldgNb	0..1	R	Recommendation: Use.	Type 5: Recommendation: Do not use.	CH17
2.79	Credit Transfer Transaction Information +Creditor ++Postal Address +++Post Code	PstCd	0..1	D	Recommendation: Use.	Type 5: Recommendation: Do not use. Type 7, 8: Must be present. Type E1, E2: From QR Code Index 3 (Exception: Neutral slips).	CH17, CH21

ISO 20022 Standard				Swiss ISO 20022 Payments Standard			
Index	**Message Item**	**XML Tag**	**Mult.**	**St.**	**General Definition**	**Payment Type-specific Definition**	**Error**
2.79	Credit Transfer Transaction Information +Creditor ++Postal Address +++Town Name	TwnNm	0..1	D	Recommendation: Use.	Type 5: Recommendation: Do not use. Type 7, 8: Must be present. Type E1, E2: From QR Code Index 3 (Exception: Neutral slips).	CH17, CH21
2.79	Credit Transfer Transaction Information +Creditor ++Postal Address +++Country Sub Division	CtrySubDvsn	0..1	O	Recommendation: Do not use.		CH17
2.79	Credit Transfer Transaction Information +Creditor ++Postal Address +++Country	Ctry	0..1	D	It is recommended to supply this element, especially in the case of foreign payments.	Type 7, 8: Must be present. Type 7: Must contain CH or LI. Type E1, E2: From QR Code Index 3 (Exception: Neutral slips).	CH21, BE09
2.79	Credit Transfer Transaction Information +Creditor ++Postal Address +++Address Line	AdrLine	0..7	D	Maximum two lines permitted. It is recommended to supply this element in the case of foreign payments.	Type 7: Must not be used.	CH17
2.79	Credit Transfer Transaction Information +Creditor ++Identification	Id	0..1	D		Type 1, 2.1, 2.2, 7, 8, E1, E2: Must not be used.	CH17
2.79	Credit Transfer Transaction Information +Creditor ++Identification +++Organisation Identification	OrgId {Or	1..1	D	Either the "BIC Or BEI" element or an element from "Other" may be used. If used, the "Private Identification" must not be present.		
2.79	Credit Transfer Transaction Information +Creditor ++Identification +++Private Identification	PrvtId Or}	1..1	D	Either the "Date And Place Of Birth" element or an element from "Other" may be used. If used, "Organisation Identification" must not be present.		
2.80	Credit Transfer Transaction Information +Creditor Account	CdtrAcct	0..1	D	Must not be used in combination with "PmtMtd" = "CHK".	Type 1, 2.1, 2.2, 3, 4, 5, 6 E1, E2: Must be present. Type E1, E2: From QR Code Index 2. Type 2.2: Must not contain a postal account number. Type 7, 8: Must not be used.	CH17, CH21
2.80	Credit Transfer Transaction Information +Creditor Account ++Identification	Id	1..1	M	Recommendation: Whenever possible the IBAN should be used. Must be used if "Creditor Account" is used.		

ISO 20022 Standard				Swiss ISO 20022 Payments Standard			
Index	**Message Item**	**XML Tag**	**Mult.**	**St.**	**General Definition**	**Payment Type-specific Definition**	**Error**
2.80	Credit Transfer Transaction Information +Creditor Account ++Identification +++IBAN	IBAN {Or	1..1	D	If used, "Other" must not be present.	Type 1, 2.1: Must not be used. Type 2.2, 3, 4, 6: Use is recommended. Type 5: Must be present. Type E1: From QR Code Index 2, only ISR-IBAN (Exception: Neutral slips). Type E2: From QR Code Index 2, normal IBAN (no ISR-IBAN) (Exception: Neutral slips).	AC01, CH21, BE09, CH16
2.80	Credit Transfer Transaction Information +Creditor Account ++Identification +++Other	Othr Or}	1..1	D	If used, then "IBAN" must not be present.	Type 1, 2.1: Must be present. Type 2.2, 3, 4, 6: May be present. Type 5, E1, E2: Must not be used.	CH17, CH21
2.80	Credit Transfer Transaction Information +Creditor Account ++Identification +++Other ++++Identification	Id	1..1	M	Must be used if "Other" is used.	Type 1: Must contain an ISR participant number; 9-character with or without hyphens. Type 2.1: Must contain a postal account number (e.g. "70-4152-8" or "700041528").	AC01
2.81	Credit Transfer Transaction Information +Ultimate Creditor	UltmtCdtr	0..1	D		Type 1, 2.1, 2.2, E1, E2: Must not be used.	CH17
2.81	Credit Transfer Transaction Information +Ultimate Creditor ++Name	Nm	0..1	M	Must be used if "Ultimate Creditor" is used, maximum 70 characters.		
2.81	Credit Transfer Transaction Information +Ultimate Creditor ++Postal Address	PstlAdr	0..1	D	If possible structured. Simultaneous use of the structured elements <StrtNm>/<BldgNb>/<PstCd>/<TwnNm> and the unstructured element <AdrLine> is not permitted.	Type 5: Is not forwarded in interbank traffic.	CH17
2.81	Credit Transfer Transaction Information +Ultimate Creditor ++Postal Address +++Address Type	AdrTp	0..1	O	Recommendation: Do not use.		
2.81	Credit Transfer Transaction Information +Ultimate Creditor ++Postal Address +++Department	Dept	0..1	O	Recommendation: Do not use.		
2.81	Credit Transfer Transaction Information +Ultimate Creditor ++Postal Address +++Sub Department	SubDept	0..1	O	Recommendation: Do not use.		
2.81	Credit Transfer Transaction Information +Ultimate Creditor ++Postal Address +++Street Name	StrtNm	0..1	R	Recommendation: Use.		

ISO 20022 Standard				Swiss ISO 20022 Payments Standard			
Index	**Message Item**	**XML Tag**	**Mult.**	**St.**	**General Definition**	**Payment Type-specific Definition**	**Error**
2.81	Credit Transfer Transaction Information +Ultimate Creditor ++Postal Address +++Building Number	BldgNb	0..1	R	Recommendation: Use.		
2.81	Credit Transfer Transaction Information +Ultimate Creditor ++Postal Address +++Post Code	PstCd	0..1	R	Recommendation: Use.		
2.81	Credit Transfer Transaction Information +Ultimate Creditor ++Postal Address +++Town Name	TwnNm	0..1	R	Recommendation: Use.		
2.81	Credit Transfer Transaction Information +Ultimate Creditor ++Postal Address +++Country Sub Division	CtrySubDvsn	0..1	O	Recommendation: Do not use.		
2.81	Credit Transfer Transaction Information +Ultimate Creditor ++Postal Address +++Country	Ctry	0..1	R	Recommendation: Use.		BE09
2.81	Credit Transfer Transaction Information +Ultimate Creditor ++Postal Address +++Address Line	AdrLine	0..7	O	Maximum two lines permitted.		
2.81	Credit Transfer Transaction Information +Ultimate Creditor ++Identification	Id	0..1	D		Type 7, 8: Must not be used.	CH17
2.81	Credit Transfer Transaction Information +Ultimate Creditor ++Identification +++Organisation Identification	OrgId {Or	1..1	D	Either the "BIC Or BEI" element or an element from "Other" may be used. If used, the "Private Identification" must not be present.		
2.81	Credit Transfer Transaction Information +Ultimate Creditor ++Identification +++Private Identification	PrvtId Or}	1..1	D	Either the "Date And Place Of Birth" element or an element from "Other" may be used. If used, "Organisation Identification" may not be present.		
2.82	Credit Transfer Transaction Information +Instruction For Creditor Agent	InstrForCdtrAgt	0..n	D	Only to be used by agreement with the financial institution. This element may, depending on the financial institution, contain different forms and instructions.	Type 1, 2.1, 2.2, 5, 7, 8, E1, E2: Must not be used.	CH16, CH17
2.83	Credit Transfer Transaction Information +Instruction For Creditor Agent ++Code	Cd	0..1	D			CH16

ISO 20022 Standard				Swiss ISO 20022 Payments Standard			
Index	**Message Item**	**XML Tag**	**Mult.**	**St.**	**General Definition**	**Payment Type-specific Definition**	**Error**
2.84	Credit Transfer Transaction Information +Instruction For Creditor Agent ++Instruction Information	InstrInf	0..1	D			CH16
2.85	Credit Transfer Transaction Information +Instruction For Debtor Agent	InstrForDbtrAgt	0..1	D	Only to be used by agreement with the financial institution. May be used, for example, to indicate payment products specific to the financial institution. This element may, depending on the financial institution, contain different forms and instructions. The values "ESRDEB" and "IPIDEB" are reserved for LSV+/BDD and e-bill payments from Paynet to financial institutions.		CH16
2.86	Credit Transfer Transaction Information +Purpose	Purp	0..1	O		Type 1, E1, E2: Element is not forwarded.	CH17
2.87	Credit Transfer Transaction Information +Purpose ++Code	Cd	1..1	M	Codes according "Payments External Code Lists" [7]. Must be used if "Purpose" is used.		
2.98	Credit Transfer Transaction Information +Remittance Information	RmtInf	0..1	O	Either Structured or Unstructured.		
2.99	Credit Transfer Transaction Information +Remittance Information ++Unstructured	Ustrd	0..n	D	Only one occurrence is allowed, maximum 140 characters. If used, then "Structured" must not be present.	Type 1, E1: Must not be used. Type E1, E2: From QR Code Index 8, if present.	CH17
2.100	Credit Transfer Transaction Information +Remittance Information ++Structured	Strd	0..n	D	Only one occurrence is allowed, maximum 140 characters inclusive XML tags. If used, then "Unstructured" must not be present.	Type 1, E1: Must be used. Type 2.1, 2.2, E2: Must not be used.	CH17, CH15, CH21
2.101	Credit Transfer Transaction Information +Remittance Information ++Structured +++Referred Document Information	RfrdDocInf	0..n	D	Recommendation: Do not use.	Type 5: Must not be used.	CH17
2.109	Credit Transfer Transaction Information +Remittance Information ++Structured +++Referred Document Amount	RfrdDocAmt	0..1	D	Recommendation: Do not use.	Type 5: Must not be used.	CH17
2.120	Credit Transfer Transaction Information +Remittance Information ++Structured +++Creditor Reference Information	CdtrRefInf	0..1	D		Type 1, E1: Must be used. Type 5: May be used.	CH21
2.121	Credit Transfer Transaction Information +Remittance Information ++Structured +++Creditor Reference Information ++++Type	Tp	0..1	D		Type 3, 4, 6: May be used. Type 5: Must be used if "Creditor Reference Information" is used. Type E1: May be used.	CH21

ISO 20022 Standard				Swiss ISO 20022 Payments Standard			
Index	**Message Item**	**XML Tag**	**Mult.**	**St.**	**General Definition**	**Payment Type-specific Definition**	**Error**
2.122	Credit Transfer Transaction Information +Remittance Information ++Structured +++Creditor Reference Information ++++Type +++++Code Or Proprietary	CdOrPrtry	1..1	M	Must be used if "Type" is used.		
2.123	Credit Transfer Transaction Information +Remittance Information ++Structured +++Creditor Reference Information ++++Type +++++Code Or Proprietary ++++++Code	Cd {Or	1..1	D	If used, then "Proprietary" must not be present.	Type 5: Must be used if "Creditor Reference Information" is used. Only the code "SCOR" is permitted. Type E1: May be used if ISO Creditor Reference according ISO 11649 is used. Only the code "SCOR" is permitted.	CH21, CH16
2.124	Credit Transfer Transaction Information +Remittance Information ++Structured +++Creditor Reference Information ++++Type +++++Code Or Proprietary ++++++Proprietary	Prtry Or}	1..1	D	If used, then "Code" must not be present.	Type 5: Must not be used.	CH17
2.125	Credit Transfer Transaction Information +Remittance Information ++Structured +++Creditor Reference Information ++++Type +++++Issuer	Issr	0..1	O			
2.126	Credit Transfer Transaction Information +Remittance Information ++Structured +++Creditor Reference Information ++++Reference	Ref	0..1	D		Type 1: Must contain an ISR reference number. Type E1: Must contain an ISR reference number or "Creditor Reference" according to ISO 11649, from QR Code Index 7 (Exception: Neutral slips). Type 5: Must be used if "Creditor Reference Information" is used, may contain "Creditor Reference" according to ISO 11649. Other types: Purpose of payment (IPI). Note: The IPI should be taken no later than 31 March 2020 from circulation.	CH16, CH21
2.127	Credit Transfer Transaction Information +Remittance Information ++Structured +++Invoicer	Invcr	0..1	D	Recommendation: Do not use.	Type 5: Must not be used.	CH17

ISO 20022 Standard				Swiss ISO 20022 Payments Standard			
Index	**Message Item**	**XML Tag**	**Mult.**	**St.**	**General Definition**	**Payment Type-specific Definition**	**Error**
2.128	Credit Transfer Transaction Information +Remittance Information ++Structured +++Invoicee	Invcee	0..1	D	Recommendation: Do not use.	Type 5: Must not be used.	CH17
2.129	Credit Transfer Transaction Information +Remittance Information ++Structured +++Additional Remittance Information	AddtlRmtInf	0..3	O	Only to be used by agreement with the financial institution.	Type 5: Must not be used.	CH17

Table 10: Credit Transfer Transaction Information (CdtTrfTxInf, C-Level)

2.4 Business specifications

2.4.1 Character set

In ISO 20022 XML messages, characters from the Unicode character set UTF-8 (8-Bit Unicode Transformation Format) must always be used (message has to be UTF-8 encoded). In XML messages under the Swiss ISO 20022 Payments Standard, only the "Latin Character Set" from this is permitted.

Characters without conversion (SWIFT character set)

The following characters, corresponding to the SWIFT character set, are accepted without conversion, as in the EPC Guidelines:

a, b, c, d, e, f, g, h, i, j, k, l, m, n, o, p, q, r, s, t, u, v, w, x, y, z

A, B, C, D, E, F, G, H, I, J, K, L, M, N, O, P, Q, R, S, T, U, V, W, X, Y, Z

0, 1, 2, 3, 4, 5, 6, 7, 8, 9

. (full stop)

, (comma)

: (colon)

' (apostrophe, also accepted as escaped character ')

+ (plus)

- (minus)

/ (slash)

((open round bracket)

) (closed round bracket)

? (question mark)

space

In addition, certain other characters are also permitted in Switzerland (specified in Appendix C). These characters can be converted if necessary for subsequent further processing. If characters are sent that are not specified in Appendix C, the message is rejected.

Character set for references

For certain references, only characters from the SWIFT character set are permitted:

- Message Identification (A-Level)
- Payment Information Identification (B-Level)
- Instruction Identification (C-Level)
- End To End Identification (C-Level)

Furthermore, these references must not begin with "/" and must not contain "//".

It is recommended to avoid the use of spaces in the "Message Identification" and "Payment Information Identification" references.

Formatting conventions for fields showing amounts

In the XML context, different formats are permitted in fields showing amounts. To ensure that the payment is processed without problem, the following formatting is recommended:

- Do not use leading or final filler characters (space, white space, zero, plus signs).
- Always use a decimal point.
- Even where the amount is a whole number, always send decimal places (the number of decimal places depends on the currency).

Certain financial institutions may define further restrictions if required.

Regardless of the format that is used, financial institutions are allowed to convert all fields showing amounts into a standard format for further processing.

2.4.2 References

For every credit transfer, various references and identifiers ensure that the transaction can always be uniquely identified at all stages.

A distinction is made between end-to-end references, which are valid for the whole transmission route from the debtor to the creditor and point-to-point references, which are only used between the individual agents (financial institutions) (Transaction Reference and Instruction Identification).

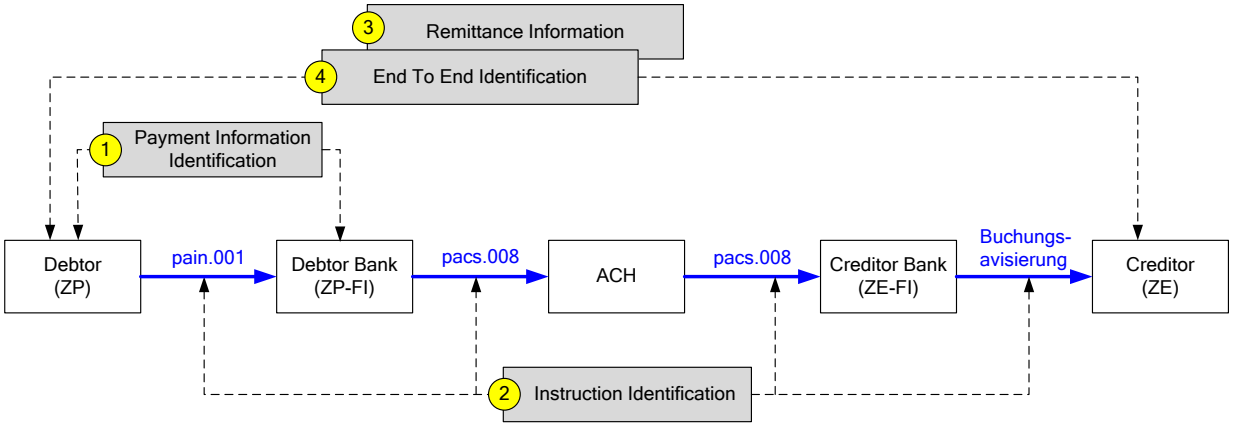

Figure 10: References

2.4.2.1 References in the processing chain

Payment Information Identification (1)

This reference is assigned by the software of the debtor and sent in the pain.001 (in the B-Level). It acts as a reference for a payment group (group of individual transactions with the same account to be debited, required execution date etc.).

Instruction Identification (2)

This reference is unique within the sending and receiving parties (serial number). It can be newly assigned by either party (in the pain.001 at C-Level).

2.4.2.2 Customer References

In addition to the references mentioned above in the processing chain, a Customer Reference (creditor reference) can also be sent in the Remittance Information, in structured or unstructured form.

Structured Customer Reference as Remittance Information (3)

The following three types of structured reference can be sent in the "CdtrRefInf/Ref" element:

Using the Swiss ISR reference

In Switzerland the ISR reference enables the creditor to make automatic comparisons between his invoices and the incoming payments.

Using the ISO Creditor Reference

The ISO Creditor Reference (ISO 11649) enables the creditor to make automatic comparisons between his invoices and the incoming payments.

Use of the ISO Creditor Reference is described in the document "EPC Guidance on the use of the future ISO standard for the Structured Creditor Reference" (EPC142-08) [8].

Use of the "Purpose of the payment" (IPI reference)

The same procedure applies to the IPI reference as to the ISR reference.

Note: The IPI should be taken no later than 31 March 2020 from circulation.

Unstructured Customer Reference as Remittance Information (3)

Instead of the structured reference, this can also be sent in unstructured form, maximum length 140 characters.

End To End Identification (4)

End To End Identification is used for the unique identification of a transaction and is assigned by the debtor. Unlike the Instruction Identification, the End To End Identification (e.g. the order number) is passed unchanged along the complete processing chain.

2.4.3 Debtor identification

The debtor is identified by the "Initiating Party" element. In principle, it is up to the debtor whether to use a name or a corresponding identification number within the sub-elements prescribed within the scheme.

2.4.4 Duplicate checking

The way duplicates are checked in pain.001 messages that are submitted may vary from one creditor to another. Checks may be carried out on individual content elements or at the level of the delivery channel.

At Swiss financial institutions, duplicate checking is carried out at least at Document (Message) level. For that reason, the "Message Identification" (<MsgId>) element must contain a unique entry, so that it can serve as the criterion for preventing duplicate processing of files that have been accidentally submitted twice. Most financial institutions check that it is unique over a period of at least 90 days.

It is recommended that the "Message Identification" is normally kept unique for as long as possible, to simplify subsequent searches over a long period.

2.4.5 Use of address information

The addresses of the parties involved, such as the Creditor, can be entered in the "Name" and "Postal Address" elements, either in structured form (recommended sub-elements are: "Street Name", "Building Number", "Post Code", "Town Name", and "Country") or unstructured (sub-element "Address Line").

It should be noted that most of today's systems and standards allow a range of 4*35 positions for the address. It should therefore be assumed at least in a parallel phase that the address information sent in the "pain.001" will have to be converted to a range of 4*35 positions during the processing chain.

For that reason it is recommended that addresses are sent in one of the following two versions in the "pain.001":

"Structured" version:

- "Name" up to 70 positions
- "Street Name", "Building Number" together max. 35 positions
- "Post Code", "Town Name" together max. 35 positions
- "Country": It is recommended that this sub-element is also sent in the elements "Creditor Agent" and "Creditor", especially in the case of foreign payments

In the "pain.001" this would appear as follows, for example:

```
<Cdtr>
<Nm>MUSTER AG</Nm>
   <PstlAdr>
      <StrtNm>Musterstrasse</StrtNm>
      <BldgNb>24</BldgNb>
      <PstCd>3000</PstCd>
      <TwnNm>Bern</TwnNm>
      <Ctry>CH</Ctry>
   </PstlAdr>
</Cdtr>
```

"Unstructured" version:

- "Name" up to 70 positions
- "Country": It is recommended that this sub-element is also sent in the elements "Creditor Agent" and "Creditor", especially in the case of foreign payments.
- First occurrence of "Address Line": max. 35 positions, giving the street and house number
- Second occurrence of "Address Line": max. 35 positions, giving the postcode and town

In the "pain.001" this would appear as follows, for example:

```
<Cdtr>
<Nm>MUSTER AG</Nm>
   <PstlAdr>
      <Ctry>CH</Ctry>
      <AdrLine>Musterstrasse 24</AdrLine>
      <AdrLine>3000 Bern</AdrLine>
   </PstlAdr>
</Cdtr>
```

2.5 Example of a payment order as "pain.001" message

2.5.1 The business situation in the example

For the details of the example in XML, the following assumptions were made:

The debtor "Muster AG, Seldwyla, CH" creates a "pain.001" message dated 15.02.2010 with two payment groups. Payment group 1 contains a single ISR transaction on 22.02.2010. Payment Group 2 contains two transactions for 18.02.2010, one IS payment and one SEPA bank payment using IBAN and BIC.

For XML versions of the example, see Appendix A.

2.5.2 Data in the example

Payment group 1 with one ISR transaction

Data for payment group 1:

Field designation	Content
Identifier for the group	PMTINF-01
Requested execution date	22.02.2010
Name/address of the debtor	MUSTER AG, SELDWYLA, CH
IBAN of the debtor	CH54 8123 0000 0019 9873 6
BIC of the debtor's financial institution	RAIFCH22

Data for the transaction:

Field designation	Content
Identifier for the transaction	INSTRID-01-01
End To End Identification	ENDTOENDID-001
Currency/Amount	CHF 3949.75
ISR participation number	01-39139-1
ISR reference number	21 00000 00003 13947 14300 09017

Payment group 2 with one IS payment and one IBAN bank payment

Data for payment group 2:

Field designation	Content
Identifier for the group	PMTINF-02
Requested execution date	18.02.2010
Name/address of the debtor	MUSTER AG, SELDWYLA, CH
IBAN of the debtor	CH54 8123 0000 0019 9873 6
BIC of the debtor's financial institution	RAIFCH22

Data for the first transaction in this payment group:

Field designation	Content
Identifier for the transaction	INSTRID-02-01
End To End Identification	ENDTOENDID-002
Currency/Amount	CHF 8‘479.25
Name/address of the creditor	Robert Scheider SA Rue de la gare 24 2501 Biel
Postal account number	25-9034-2
Purpose (unstructured)	Rechnung Nr. 408

Data for the second transaction in this payment group:

Field designation	Content
Identifier for the transaction	INSTRID-02-02
End To End Identification	ENDTOENDID-003
Currency/Amount	EUR 3‘421.00
Name/address of the creditor	Peter Haller Rosenauweg 4 D-80036 München
IBAN of the creditor	DE62 0076 2011 0623 8529 57
Purpose (structured)	RF712348231
BIC of the creditor's financial institution	UBSWDEFF

3 Customer Payment Status Report (pain.002)

3.1 General

The XML message Customer Payment Status Report (pain.002) is used by the financial institution to inform customers about the status of pain.001 transfer orders or pain.008 collection orders that have been sent. It is used on the basis of the ISO 20022 XML schema "pain.002.001.03".

Note: The business specifications for the Customer Payment Status Report "pain.002" are described in detail in section 6 of the Swiss Business Rules.

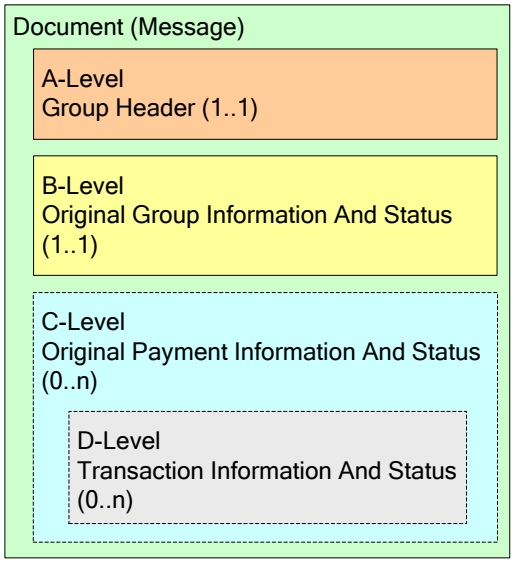

The "pain.002" XML message is essentially structured as follows:

- ***A-Level:*** message level, "Group Header". This block must occur exactly once.
- ***B-Level:*** information about the original message level, "Original Group Information And Status". This block must be present exactly once.
- ***C-Level:*** Information about the original order information, "Original Payment Information And Status". This block can be present up to n times.
- ***D-Level:*** Information about the original transactions, "Transaction Information And Status". This block can be present up to n times.

Figure 11: Basic message structure for the "pain.002" XML message

In the following ***technical specifications*** for the XML message Customer Payment Status Report (pain.002), each of these message levels is discussed in a separate sub-section:

- 3.2.1 "Group Header (GrpHdr, A-Level)"
- 3.2.2 "Original Group Information And Status (OrgnlGrpInfAndSts, B-Level)"
- 3.2.3 "Original Payment Information And Status (OrgnlPmtInfAndSts, C-Level)"
- 3.2.4 "Transaction Information And Status (TxInfAndSts, D-Level)"

All the possible error messages are listed in section 3.2.5 "Status Reason Codes".

Note: If, in the original message, a mandatory field was not sent, or was blank, or a "pattern" was broken, then that element is not returned in the Payment Status Report. In these cases the error message is either FF01 (schema error) or CH21 (mandatory field missing). Normally, the details of the field that was not sent are referred to as an error text in the "Additional Information" <AddtlInf> element (example: "Mandatory element <IBAN> not sent or blank").

3.2 Technical specifications

3.2.1 Group Header (GrpHdr, A-Level)

The Group Header (A-Level of the message) contains all the elements that apply to all the transactions in the pain.002 Customer Payment Status Report XML message. It occurs exactly once in the message.

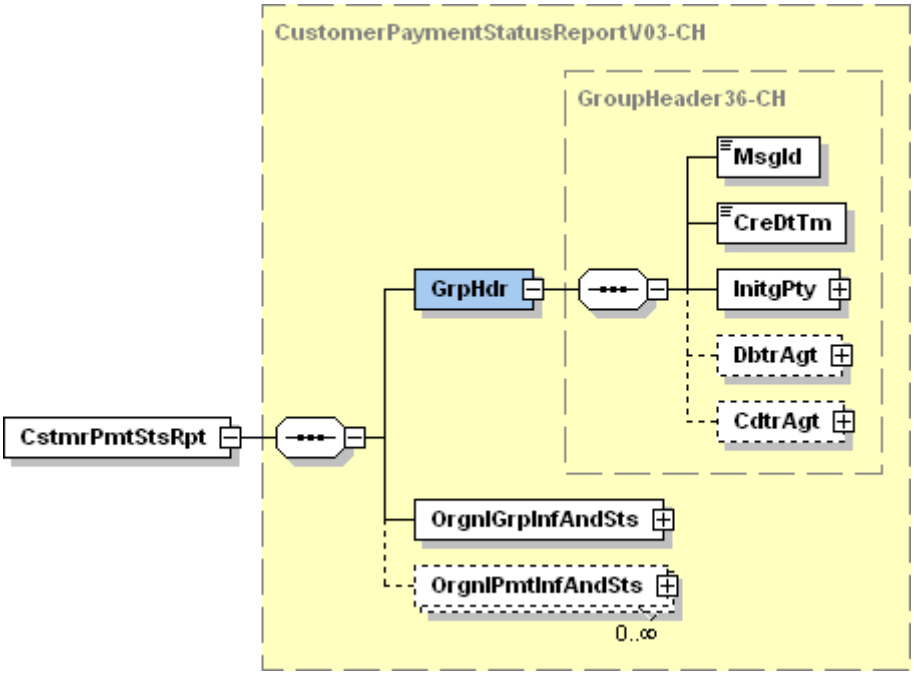

Figure 12: Group Header (GrpHdr)

The following table specifies all the elements of the Group Header that are relevant to the Swiss ISO 20022 Payments Standard.

Note: The Customer Payment Status Report (pain.002) is used both to report back statuses for payment orders (pain.001) and also for collection orders (pain.008) that have been submitted.

ISO 20022 Standard				Swiss ISO 20022 Payments Standard	
Index	**Message Item**	**XML Tag**	**Mult.**	**St.**	**General Definition**
	Document +Customer Payment Status Report V03	CstmrPmtStsRpt	1..1		
1.0	Group Header	GrpHdr	1..1	M	
1.1	Group Header +Message Identification	MsgId	1..1	M	Unique message reference, assigned to the message by the sender.
1.2	Group Header +Creation Date Time	CreDtTm	1..1	M	Must be in a valid format. Recommendation: Should be the same as the actual date of creation.
1.3	Group Header +Initiating Party	InitgPty	0..1	D	Sender of the message One or more sub-elements can be used to give details of the sender.
1.3	Group Header +Initiating Party ++Name	Nm	0..1	O	Name of the sender of the message, maximum 70 characters
1.3	Group Header +Initiating Party ++Identification	Id	0..1	O	Identification of the sender of the message
1.3	Group Header +Initiating Party ++Identification +++Organisation Identification	OrgId {Or	1..1	D	Only "BIC Or BEI" or an element of "Other" permitted. If used, the "Private Identification" must not be present.
1.3	Group Header +Initiating Party ++Identification +++Private Identification	PrvtId Or}	1..1	D	Only "Date And Place Of Birth" or an element of "Other" permitted. If used, the "Organisation Identification" must not be present.
1.5	Group Header +Debtor Agent	DbtrAgt	0..1	D	Sender of the message Can be used if the "Debtor Agent" is the sender of the message. Only BIC or the BC number are permitted under "Clearing System Member Identification/Member Identification". Note: Element is only used for Credit Transfer (original message "pain.001").
1.6	Group Header +Creditor Agent	CdtrAgt	0..1	D	Sender of the message Can be used if the "Creditor Agent" is the sender of the message. Only BIC or the BC number are permitted under "Clearing System Member Identification/Member Identification". Note: Element is only used for Direct Debit (original message "pain.008").

Table 11: Group Header (GrpHdr, A-Level)

3.2.2 Original Group Information And Status (OrgnlGrpInfAndSts, B-Level)

The Original Group Information And Status (B-Level of the message) occurs in the pain.002 exactly once.

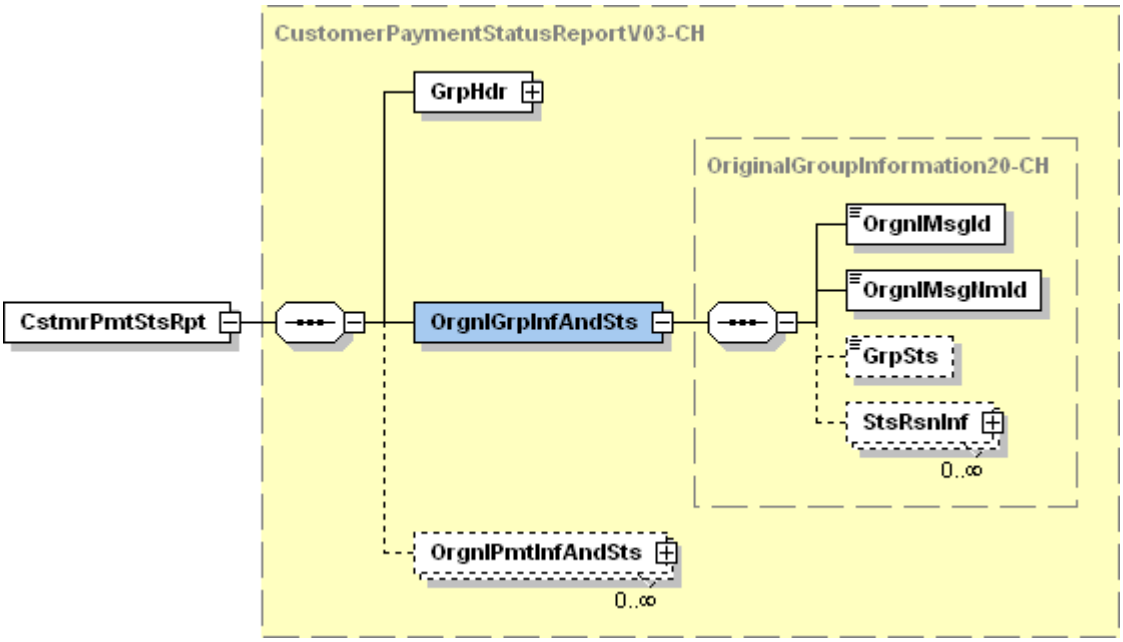

Figure 13: Original Group Information And Status (OrgnlGrpInfAndSts)

The following table specifies all the elements of the Original Group Information And Status that are relevant to the Swiss ISO 20022 Payments Standard.

ISO 20022 Standard				Swiss ISO 20022 Payments Standard	
Index	**Message Item**	**XML Tag**	**Mult.**	**St.**	**General Definition**
2.0	Original Group Information And Status	OrgnlGrpInfAndSts	1..1	M	
2.1	Original Group Information And Status +Original Message Identification	OrgnlMsgId	1..1	M	"Message Identification" from the original "pain.001" or "pain.008" message. If the message identification could not be identified, then "UNKNOWN" is sent back here.
2.2	Original Group Information And Status +Original Message Name Identification	OrgnlMsgNmId	1..1	M	Name of message "pain.001…" or "pain.008…" If the message could not be identified, then "UNKNOWN" is sent back here.
2.6	Original Group Information And Status +Group Status	GrpSts	0..1	D	The values "ACCP", "ACWC", "PART" and "RJCT" are sent in the status report. Reponses of a technical kind may also contain the status "ACTC". Depending on the financial institution and the delivery channel, the "Group Status" may not be required. Deviating from the SEPA recommendations, in Switzerland positive "Group Status" messages are also sent back.
2.7	Original Group Information And Status +Status Reason Information	StsRsnInf	0..n	D	Sent if there are errors/warnings at A-Level. Note: • "Status Reason Information" is used at no more than one level within a message, either in - "Original Group Information And Status" or - "Original Payment Information And Status" or - "Transaction Information And Status". • If "Group Status" = "ACCP" the "Status Reason Information" is not used. • If "Group Status" = "PART" the "Status Reason Information" is used either at the level "Original Payment Information And Status" or "Transaction Information And Status". • If "Group Status" = "RJCT" because all B-Levels have been rejected, the "Status Reason Information" is used at the level "Original Payment Information and Status". • If "Group Status" = "RJCT" because all C-Levels have been rejected, the "Status Reason Information" is used at the level "Transaction Information And Status".
2.8	Original Group Information And Status +Status Reason Information ++Originator	Orgtr	0..1	D	Originator of the status information Can be used if the originator of the status information is not the sender of the message ("Group Header/Initiating Party" or "Group Header/Creditor Agent").
2.8	Original Group Information And Status +Status Reason Information ++Originator +++Name	Nm	0..1	D	Name of the originator To be used if no BIC is available.
2.8	Original Group Information And Status +Status Reason Information ++Originator +++Identification	Id	0..1	D	If this is used, the "Name" must not be present.
2.8	Original Group Information And Status +Status Reason Information ++Originator +++Identification ++++Organisation Identification	OrgId {Or	1..1	M	Must be used if "Identification" is used.

ISO 20022 Standard				Swiss ISO 20022 Payments Standard	
Index	**Message Item**	**XML Tag**	**Mult.**	**St.**	**General Definition**
2.8	Original Group Information And Status +Status Reason Information ++Originator +++Identification ++++Organisation Identification +++++BICOr BEI	BICOrBEI	0..1	M	BIC of the originator
2.8	Original Group Information And Status +Status Reason Information ++Originator +++Identification ++++Private Identification	PrvtId Or}	1..1	N	
2.9	Original Group Information And Status +Status Reason Information ++Reason	Rsn	0..1	M	Reason for the status
2.10	Original Group Information And Status +Status Reason Information ++Reason +++Code	Cd {Or	1..1	D	Code as described in section "Status Reason Codes" If used, then "Proprietary" must not be present.
2.11	Original Group Information And Status +Status Reason Information ++Reason +++Proprietary	Prtry Or}	1..1	D	Swiss financial institutions will, wherever possible, abide by ISO standards ("Code" element). If used, then "Code" must not be present.
2.12	Original Group Information And Status +Status Reason Information ++Additional Information	AddtlInf	0..n	O	Can be used optionally to provide additional information about the "Reason".

Table 12: Original Group Information And Status (OrgnlGrpInfAndSts, B-Level)

3.2.3 Original Payment Information And Status (OrgnlPmtInfAndSts, C-Level)

The Original Payment Information And Status (C-Level of the message) can occur once or more than once in the pain.002 message.

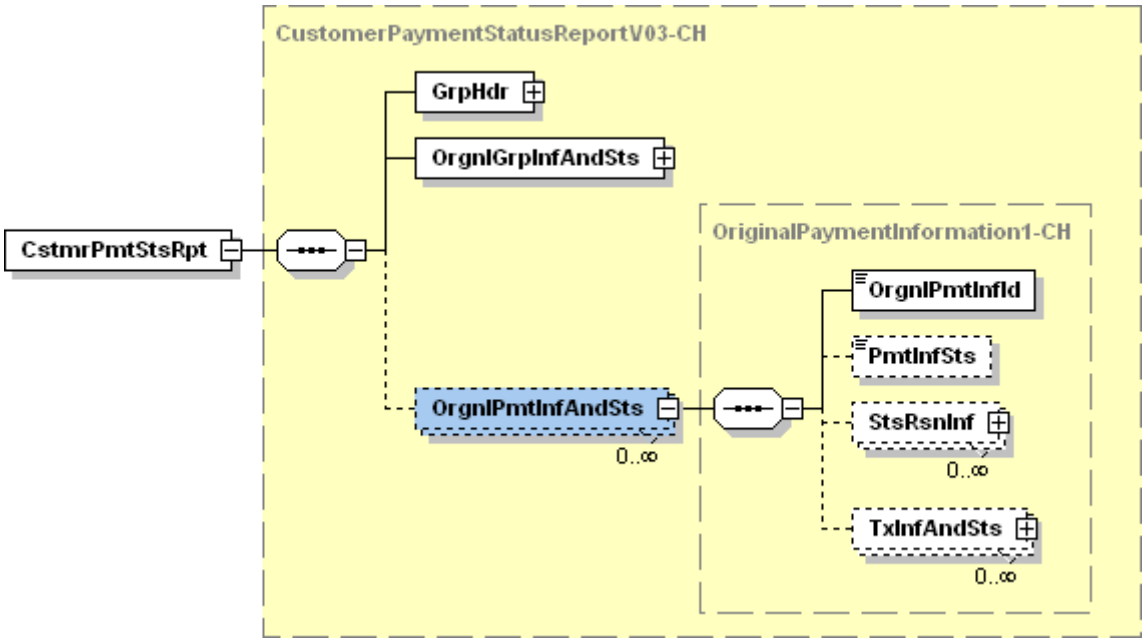

Figure 14: Original Payment Information And Status (OrgnlPmtInfAndSts)

The following table specifies all the elements of the Original Payment Information And Status that are relevant to the Swiss ISO 20022 Payments Standard.

ISO 20022 Standard				Swiss ISO 20022 Payments Standard	
Index	**Message Item**	**XML Tag**	**Mult.**	**St.**	**General Definition**
3.0	Original Payment Information And Status	OrgnlPmtInfAndSts	0..n	D	Is sent if there are errors/warnings at B-/C-Level of the original "pain.001" or "pain.008" message.
3.1	Original Payment Information And Status +Original Payment Information Identification	OrgnlPmtInfId	1..1	M	"Payment Information Identification" (B-Level) from the original "pain.001" or "pain.008" message (or "NOTPROVIDED"). Is always sent if there are errors/warnings at B- or C-Level.
3.4	Original Payment Information And Status +Payment Information Status	PmtInfSts	0..1	D	This element is sent if there are errors/warnings at B-Level of the order (pain.001). Only "ACWC", "PART", "RJCT" are sent, no other interim status. Deviating from SEPA, positive "Payment Information-Status" messages are also sent back. Additional status messages may include other values, such as "ACTC" for instance (after a purely technical validation of the received message) or "ACCP" (status message due to a status change of an order or as a response to individual B-Levels).
3.5	Original Payment Information And Status +Status Reason Information	StsRsnInf	0..n	D	Is sent if there are errors/warnings at B-Level. Note: • "Status Reason Information is used at no more than one level within a message, either in - "Original Group Information And Status" or - "Original Payment Information And Status" or - "Transaction Information And Status". • If "PmtInfSts" = "ACWC" because warnings at C-Level have occurred, the "Status Reason Information" is used at the level "Transaction Information And Status". • If "PmtInfSts" = "PART" the "Status Reason Information" is used at the level "Transaction Information And Status". • If "PmtInfSts" = "RJCT" because all C-Levels have been rejected, the "Status Reason Information" is used at the level "Transaction Information And Status".
3.6	Original Payment Information And Status +Status Reason Information ++Originator	Orgtr	0..1	D	Originator of the status information Can be used if the originator of the status information is not the sender of the message ("Group Header/Initiating Party" or "Group Header/Creditor Agent").
3.6	Original Payment Information And Status +Status Reason Information ++Originator +++Name	Nm	0..1	D	Name of the originator To be used if no "BIC/BEI" is available. If this is used, the "Identification" must not be present.
3.6	Original Payment Information And Status +Status Reason Information ++Originator +++Identification	Id	0..1	D	If this is used, the "Name" must not be present.
3.6	Original Payment Information And Status +Status Reason Information ++Originator +++Identification ++++Organisation Identification	OrgId {Or	1..1	M	Must be used if "Identification" is used.
3.6	Original Payment Information And Status +Status Reason Information ++Originator +++Identification ++++Organisation Identification +++++BICOr BEI	BICOrBEI	0..1	M	BIC/BEI of the originator Must be used if "Identification" is used.

ISO 20022 Standard				Swiss ISO 20022 Payments Standard	
Index	**Message Item**	**XML Tag**	**Mult.**	**St.**	**General Definition**
3.6	Original Payment Information And Status +Status Reason Information ++Originator +++Identification ++++Private Identification	PrvtId Or}	1..1	N	
3.7	Original Payment Information And Status +Status Reason Information ++Reason	Rsn	0..1	M	Reason for the status Must be used if "Status Reason Information" is used.
3.8	Original Payment Information And Status +Status Reason Information ++Reason +++Code	Cd {Or	1..1	D	Code as described in section "Status Reason Codes" If this is used, "Proprietary" must not be present.
3.9	Original Payment Information And Status +Status Reason Information ++Reason +++Proprietary	Prtry Or}	1..1	D	Swiss financial institutions will, wherever possible, abide by ISO standards ("Code" element). If used, then "Code" must not be present.
3.10	Original Payment Information And Status +Status Reason Information ++Additional Information	AddtlInf	0..n	O	Can be used optionally to provide additional information about the "Reason".

Table 13: Original Payment Information and Status (OrgnlPmtInfAndSts, C-Level)

3.2.4 Transaction Information And Status (TxInfAndSts, D-Level)

The Transaction Information And Status (D-Level of the message) can occur once or more than once in the pain.002 message.

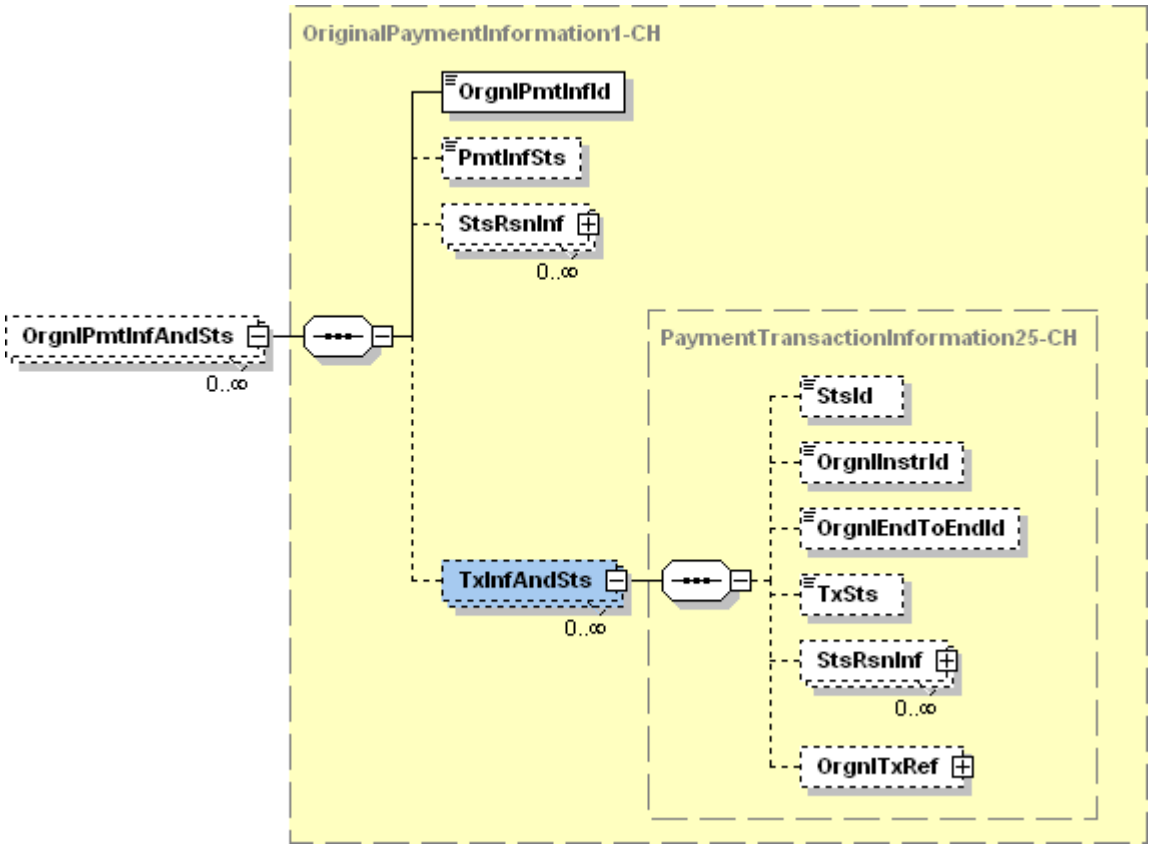

Figure 15: Transaction Information And Status (TxInfAndSts)

The following table specifies all the elements of the Transaction Information And Status that are relevant to the Swiss ISO 20022 Payments Standard.

ISO 20022 Standard				Swiss ISO 20022 Payments Standard	
Index	**Message Item**	**XML Tag**	**Mult.**	**St.**	**General Definition**
3.15	Transaction Information And Status	TxInfAndSts	0..n	D	Is sent if there are errors/warnings at C-Level of the original "pain.001" or "pain.008" message.
3.16	Transaction Information And Status +Status Identification	StsId	0..1	O	Unique identification, set by the originator of this message.
3.17	Transaction Information And Status +Original Instruction Identification	OrgnlInstrId	0..1	D	"Instruction Identification" (C-Level) from the original message. Is always sent if there are errors/warnings at C-Level (if not available, then "NOTPROVIDED" is sent).
3.18	Transaction Information And Status +Original End To End Identification	OrgnlEndToEndId	0..1	D	"End To End Identification" (C-Level) from the original message. Is always sent if there are errors/warnings at C-Level (if not available or empty, then "NOTPROVIDED" is sent).
3.19	Transaction Information And Status +Transaction Status	TxSts	0..1	D	Is sent if there are errors/warnings at C-Level. Only "ACWC" and "RJCT" are sent, no other interim status. "ACCP" is not sent explicitly.
3.20	Transaction Information And Status +Status Reason Information	StsRsnInf	0..n	D	Is sent if there are errors/warnings at C-Level. Note: "Status Reason Information" is used at no more than one level within a message, either in - "Original Group Information And Status" or - "Original Payment Information And Status" or - "Transaction Information And Status".
3.21	Transaction Information And Status +Status Reason Information ++Originator	Orgtr	0..1	D	Originator of the status information Can be used if the originator of the status information is not the sender of the message ("Group Header/Initiating Party" or "Group Header/Creditor Agent").
3.21	Transaction Information And Status +Status Reason Information ++Originator +++Name	Nm	0..1	D	Name of the originator To be used if no "BIC/BEI" is available. If this is used, the "Identification" must not be present.
3.21	Transaction Information And Status +Status Reason Information ++Originator +++Identification	Id	0..1	D	If this is used, the "Name" must not be present.
3.21	Transaction Information And Status +Status Reason Information ++Originator +++Identification ++++Organisation Identification	OrgId {Or	1..1	M	Must be used if "Identification" is used.
3.21	Transaction Information And Status +Status Reason Information ++Originator +++Identification ++++Organisation Identification +++++BICOr BEI	BICOrBEI	0..1	M	BIC/BEI of the originator Must be used if "Identification" is used.

ISO 20022 Standard				Swiss ISO 20022 Payments Standard	
Index	**Message Item**	**XML Tag**	**Mult.**	**St.**	**General Definition**
3.21	Transaction Information And Status +Status Reason Information ++Originator +++Identification ++++Private Identification	PrvtId Or}	1..1	N	
3.22	Transaction Information And Status +Status Reason Information ++Reason	Rsn	0..1	M	Reason for the status Must be used if "Status Reason Information" is used.
3.23	Transaction Information And Status +Status Reason Information ++Reason +++Code	Cd {Or	1..1	D	Code as described in section "Status Reason Codes" If this is used, "Proprietary" must not be present.
3.24	Transaction Information And Status +Status Reason Information ++Reason +++Proprietary	Prtry Or}	1..1	D	Swiss financial institutions will, wherever possible, abide by ISO standards ("Code" element). If used, then "Code" must not be present.
3.25	Transaction Information And Status +Status Reason Information ++Additional Information	AddtlInf	0..n	O	Can be used optionally to provide additional information about the "Status Reason".
3.32	Transaction Information And Status +Original Transaction Reference	OrgnlTxRef	0..1	D	Original elements from the original message Generally only those elements are sent back which caused warnings or errors. Optionally, other fields can be sent back, including complete transactions that have been submitted.
3.34	Transaction Information And Status +Original Transaction Reference ++Amount	Amt	0..1	O	Information from the original message
3.39	Transaction Information And Status +Original Transaction Reference ++Interbank Settlement Date	IntrBkSttlmDt	0..1	D	Effective settlement date Sent if the required settlement date has been set for the next banking business/Post Office working day.
3.40	Transaction Information And Status +Original Transaction Reference ++Requested Collection Date	ReqdColltnDt	0..1	O	Information from the original message Element is only used for Direct Debit (original message "pain.008").
3.41	Transaction Information And Status +Original Transaction Reference ++Requested Execution Date	ReqdExctnDt	0..1	O	Information from the original message Element is only used for Credit Transfer (original message "pain.001").
3.42	Transaction Information And Status +Original Transaction Reference ++Creditor Scheme Identification	CdtrSchmeId	0..1	O	Information from the original message Element is only used for Direct Debit (original message "pain.008").
3.55	Transaction Information And Status +Original Transaction Reference ++Payment Type Information	PmtTpInf	0..1	O	Information from the original message

ISO 20022 Standard				Swiss ISO 20022 Payments Standard	
Index	**Message Item**	**XML Tag**	**Mult.**	**St.**	**General Definition**
3.68	Transaction Information And Status +Original Transaction Reference ++Payment Method	PmtMtd	0..1	O	Information from the original message
3.69	Transaction Information And Status +Original Transaction Reference ++Mandate Related Information	MndtRltdInf	0..1	O	Information from the original message Element is only used for Direct Debit (original message "pain.008").
3.88	Transaction Information And Status +Original Transaction Reference ++Remittance Information	RmtInf	0..1	O	Information from the original message
3.120	Transaction Information And Status +Original Transaction Reference ++Ultimate Debtor	UltmtDbtr	0..1	O	Information from the original message
3.121	Transaction Information And Status +Original Transaction Reference ++Debtor	Dbtr	0..1	O	Information from the original message
3.122	Transaction Information And Status +Original Transaction Reference ++Debtor Account	DbtrAcct	0..1	O	Information from the original message
3.123	Transaction Information And Status +Original Transaction Reference ++Debtor Agent	DbtrAgt	0..1	O	Information from the original message
3.125	Transaction Information And Status +Original Transaction Reference ++Creditor Agent	CdtrAgt	0..1	O	Information from the original message
3.127	Transaction Information And Status +Original Transaction Reference ++Creditor	Cdtr	0..1	O	Information from the original message
3.128	Transaction Information And Status +Original Transaction Reference ++Creditor Account	CdtrAcct	0..1	O	Information from the original message
3.129	Transaction Information And Status +Original Transaction Reference ++Ultimate Creditor	UltmtCdtr	0..1	O	Information from the original message

Table 14: Transaction Information And Status (TxInfAndSts, D-Level)

3.2.5 Status Reason Codes

The reason for the rejection or information about modifications to data are given in the Status Reason Code element. For this purpose, financial institutions use, wherever possible, the ISO Code.

ISO Code

In principle, all values from the Payments External Code Lists [7] (see "ExternalStatus Reason1Code") can be used.

The ISO code values used in these Swiss Implementation Guidelines for which there are also Swiss code values are listed in the following table and are used in the "Code" element (codes shaded in dark colours are only used for Swiss Direct Debit).

ISO Code	Error
AC01	Incorrect account number
AGNT	Wrong agent
AM01	Amount must be greater than zero
AM02	Not allowed amount
AM03	Not allowed currency
AM10	Invalid control sum
AM18	Value in Number Of Transactions does not match the number of transactions
BE01	Identification of customer is not consistent with associated account number
BE09	Value in Country Code is not valid
CH03	Value in Requested Execution Date or Requested Collection Date is too far in the future
CH04	Value in Requested Execution Date or Requested Collection Date is too far in the past
CH07	Element is not to be used at B- and C-Level
CH11	Value in Creditor Identifier is incorrect
CH15	Content of element includes more than 140 characters
CH16	Content is formally incorrect
CH17	Element is not admitted
CH20	Number of decimal points not compatible with the currency
CH21	Required compulsory element missing
CURR	Incorrect currency
DT01	Invalid date
DT06	Date of settlement is set for the next possible banking business/Post Office working day (this code does not lead to a rejection; it is only there for information)
DU01	Value of Message Identification is not unique
DU02	Value in Payment Information Identification is not unambiguously in the message
DU05	Element Instruction Identification is not unique in the B-Level
MD01	No mandate (payment authorization)
RC01	Bank identifier incorrect
RR12	Invalid identification

Table 15: Status Reason Codes used in Switzerland

Financial institutions are also allowed to send individual status information. In that case, the ISO-Code NARR is sent in the Code element and the relevant information entered in the Additional Information element.

CH Code

In addition to the ISO codes, in exceptional cases in Switzerland the status can be shown using specific Swiss or institute-specific codes (in the «Proprietary» element).

3.3 Business specifications

The business specifications for the Customer Payment Status Report pain.002 are described in detail in section 6 of the Swiss Business Rules.

3.4 Examples of Status Reports as pain.002 messages

For the details of the examples in XML, the following assumptions were made:

First example: OK case

The first example shows a positive response message (Customer Payment Status Report pain.002) to a payment message that has been received (Customer Credit Transfer Initiation pain.001) as described in section 2.5.

Second example: NOK case

The second example shows a negative response message (Customer Payment Status Report pain.002) to a collection order that has been received. Here the following assumption was made: in the payment message that was received (Customer Credit Transfer Initiation pain.001) as described in section 2.5, one of the transactions includes an invalid IBAN for the creditor (example: QQ61 1904 3002 3456 7320).

Data for the NOK case:

Field designation	Content
Identification of the original message	MSG-01
Identification of the original group	PMTINF-02
Identification of the original transaction	INSTRID-02-02
Original end-to-end identification	ENDTOENDID-003
Error code (Group Status)	PART
Error code (Payment Information Status)	PART
Error code (Transaction Status)	RJCT
Error code (Reason)	CH06
Contents of the incorrect element (Creditor Account)	QQ61 1904 3002 3456 7320

For XML versions of the examples see Appendix A.

Appendix A: XML schemas and examples

XML-Schemas

The original XML schemas

- ***pain.001.001.03.ch.02.xsd*** and
- ***pain.002.001.03.ch.02.xsd***

are published on the www.iso-payments.ch website.

They should preferably be opened using specific XML software.

Examples

On the www.iso-payments.ch website, the examples described in this document are published as XML files:

- ***pain_001_Beispiel_1.xml*** (Example from section 2.5)
- ***pain_002_CT_Beispiel_OK.xml*** (First example from section 3.4)
- ***pain_002_CT_Beispiel_NOK.xml*** (Second example from section 3.4)

Appendix B: Symbols for graphical XML representation

Expand and collapse symbols

Wherever parts of the tree structure can be expanded or collapsed, expand and collapse symbols are added to the symbols in the graphical representation. These consist of a small square containing either a plus sign or a minus sign.

⊞ Expand symbol: if you click on the plus sign the tree structure is expanded so subsequent symbols (attributes or child elements) are displayed. The expand symbol then changes to a collapse symbol.

⊟ Collapse symbol: if you click on the minus sign, the tree structure is collapsed again, i.e. the subsequent symbols disappear again. The collapse symbol then changes to an open symbol again.

Elements

Elements are shown as rectangles containing the name of the element. For mandatory elements, the rectangle is shown with a continuous line, for optional elements the line is dotted.

For complex elements, which, unlike simple elements could contain attributes or other elements (so-called child elements), the rectangle has an expand or collapse symbol on the right.

Three little lines in the top left corner of the rectangle indicate that the element contains data (otherwise the element contains child elements).

Elements which are allowed to occur more than once are shown as 2 superimposed rectangles. Bottom right, you can see the minimum and maximum number of occurrences.

Examples:

Mandatory simple element

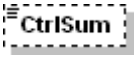

Optional simple element

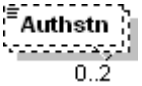

Optional simple element which can occur a maximum of twice

Mandatory complex element (with child elements) with collapsed tree structure

Mandatory complex element (with child elements) with expanded tree structure

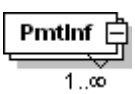

Mandatory complex element (with child elements) which can occur any number of times

Mandatory complex element (with attributes)

Attributes

Attributes are also shown as rectangles, containing the name of the attribute. They are surrounded by a box containing the word "attributes" and an expand or collapse symbol. For mandatory attributes, the rectangle is drawn with a continuous line, for optional attributes the line is dotted.

Example:

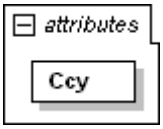

Expanded attribute

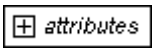

Collapsed attribute

Choice

To the right of a choice symbol, the connecting lines branch off to the possible elements, of which only one can be present in the XML message.

Choice symbol

Sequence

To the right of a sequence symbol, the connecting lines branch off to the elements which are to be used in the XML message in the order shown (optional elements and attributes can of course also be omitted).

Sequence symbol

Frame

For increased clarity, all the child elements, attributes and other information belonging to a complex element are surrounded by a dotted frame with a yellow shaded background.

Example:

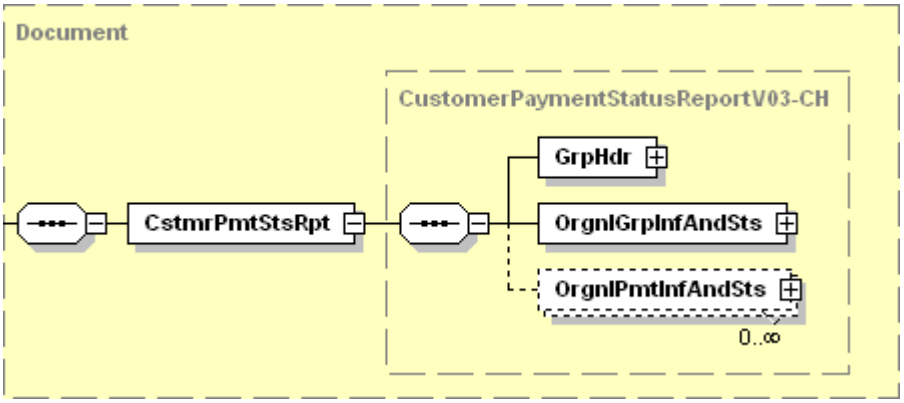

Appendix C: Character conversion table

The characters shown in the following Table 16 are also permitted in Switzerland, as explained in section 2.4.1 "Character set".

The "Conversion to" column shows a possible conversion to other characters.

Character	Designation	Conversion to
!	EXCLAMATION MARK	.
" or "	QUOTATION MARK	.
#	NUMBER SIGN	.
%	PERCENT SIGN	.
&[1]	AMPERSAND	+
*	ASTERISK	.
;	SEMICOLON	.
<[1]	LESS-THAN SIGN	.
> or >	GREATER-THAN SIGN	.
÷	DIVISION SIGN	.
=	EQUALS SIGN	.
@	COMMERCIAL AT	.
_	LOW LINE	.
$	DOLLAR SIGN	.
£	POUND SIGN	.
[	LEFT SQUARE BRACKET	.
]	RIGHT SQUARE BRACKET	.
{	LEFT CURLY BRACKET	.
}	RIGHT CURLY BRACKET	.
\	REVERSE SOLIDUS	.
`	GRAVE ACCENT	.
´	ACUTE ACCENT	.
~	TILDE	.
à	LATIN SMALL LETTER A WITH GRAVE	a
á	LATIN SMALL LETTER A WITH ACUTE	a
â	LATIN SMALL LETTER A WITH CIRCUMFLEX	a
ä	LATIN SMALL LETTER A WITH DIAERESIS	ae or a
ç	LATIN SMALL LETTER C WITH CEDILLA	c
è	LATIN SMALL LETTER E WITH GRAVE	e
é	LATIN SMALL LETTER E WITH ACUTE	e
ê	LATIN SMALL LETTER E WITH CIRCUMFLEX	e

[1] The characters & (AMPERSAND) and < (LESS-THAN SIGN) can only be shown in text in XML elements as "escaped".

Character	Designation	Conversion to
ë	LATIN SMALL LETTER E WITH DIAERESIS	e
ì	LATIN SMALL LETTER I WITH GRAVE	i
í	LATIN SMALL LETTER I WITH ACUTE	i
î	LATIN SMALL LETTER I WITH CIRCUMFLEX	i
ï	LATIN SMALL LETTER I WITH DIAERESIS	i
ñ	LATIN SMALL LETTER N WITH TILDE	n
ò	LATIN SMALL LETTER O WITH GRAVE	o
ó	LATIN SMALL LETTER O WITH ACUTE	o
ô	LATIN SMALL LETTER O WITH CIRCUMFLEX	o
ö	LATIN SMALL LETTER O WITH DIAERESIS	oe or o
ù	LATIN SMALL LETTER U WITH GRAVE	u
ú	LATIN SMALL LETTER U WITH ACUTE	u
û	LATIN SMALL LETTER U WITH CIRCUMFLEX	u
ü	LATIN SMALL LETTER U WITH DIAERESIS	ue or u
ý	LATIN SMALL LETTER Y WITH ACUTE	Y
ß	LATIN SMALL LETTER SHARP S	ss or s
À	LATIN CAPITAL LETTER A WITH GRAVE	A
Á	LATIN CAPITAL LETTER A WITH ACUTE	A
Â	LATIN CAPITAL LETTER A WITH CIRCUMFLEX	A
Ä	LATIN CAPITAL LETTER A WITH DIAERESIS	AE or A
Ç	LATIN CAPITAL LETTER C WITH CEDILLA	C
È	LATIN CAPITAL LETTER E WITH GRAVE	E
É	LATIN CAPITAL LETTER E WITH ACUTE	E
Ê	LATIN CAPITAL LETTER E WITH CIRCUMFLEX	E
Ë	LATIN CAPITAL LETTER E WITH DIAERESIS	E
Ì	LATIN CAPITAL LETTER I WITH GRAVE	I
Í	LATIN CAPITAL LETTER I WITH ACUTE	I
Î	LATIN CAPITAL LETTER I WITH CIRCUMFLEX	I
Ï	LATIN CAPITAL LETTER I WITH DIAERESIS	I
Ò	LATIN CAPITAL LETTER O WITH GRAVE	O
Ó	LATIN CAPITAL LETTER O WITH ACUTE	O
Ô	LATIN CAPITAL LETTER O WITH CIRCUMFLEX	O
Ö	LATIN CAPITAL LETTER O WITH DIAERESIS	OE or O
Ù	LATIN CAPITAL LETTER U WITH GRAVE	U
Ú	LATIN CAPITAL LETTER U WITH ACUTE	U
Û	LATIN CAPITAL LETTER U WITH CIRCUMFLEX	U
Ü	LATIN CAPITAL LETTER U WITH DIAERESIS	UE or U
Ñ	LATIN CAPITAL LETTER N WITH TILDE	N

Table 16: Character conversion

Appendix D: Basis for the Swiss recommendations

The Swiss recommendations (Business Rules and these Implementation Guidelines "Customer Credit Transfer") are based on documents from ISO and EPC.

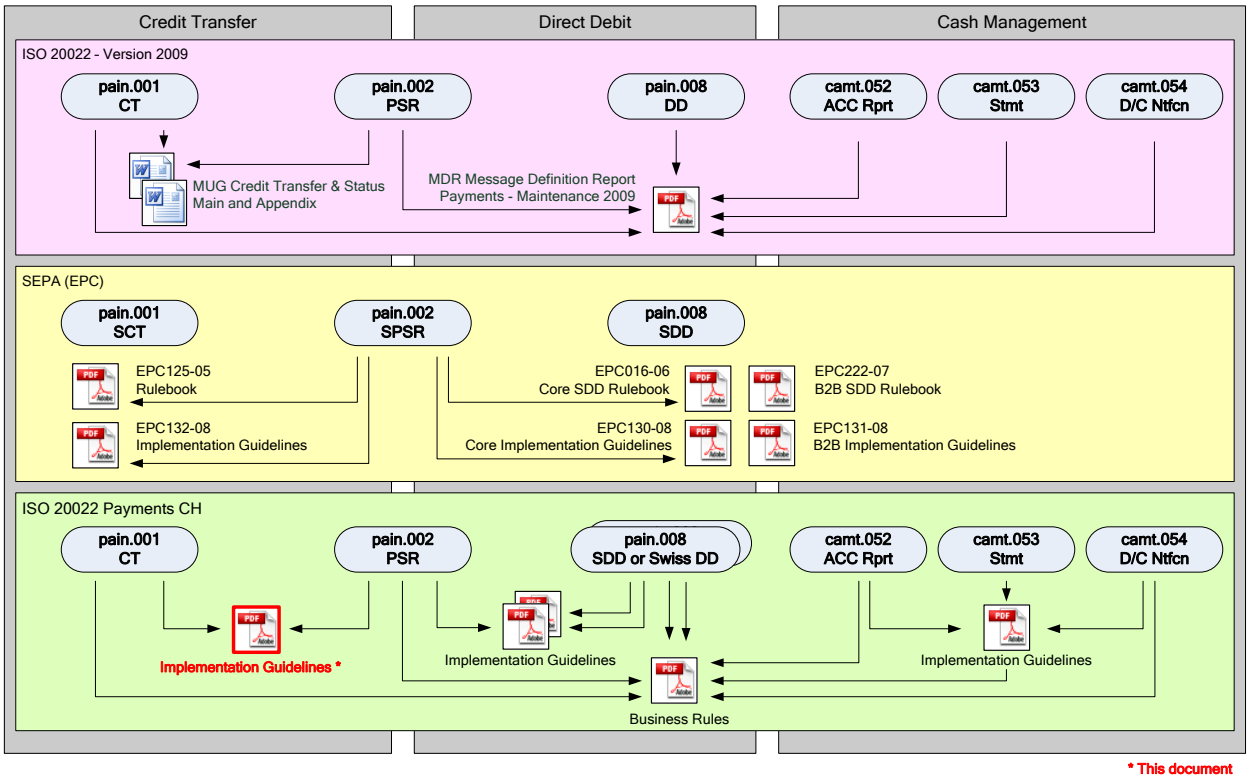

Figure 16: Basis for the Swiss recommendations

Appendix E: Table of tables

Table 1: Reference documents 6
Table 2: Links to the relevant Internet pages 6
Table 3: Domestic payment types 14
Table 4: Foreign payment types 15
Table 5: Payment types not involving a financial institution (domestic and foreign) 15
Table 6: Group Header (GrpHdr, A-Level) 21
Table 7: Payment Information (PmtInf, B-Level) 28
Table 8: Credit Transfer Transaction Information (CdtTrfTxInf, C-Level) 42
Table 9: Group Header (GrpHdr, A-Level) 52
Table 10: Original Group Information And Status (OrgnlGrpInfAndSts, B-Level) 55
Table 11: Original Payment Information and Status (OrgnlPmtInfAndSts, C-Level) 58
Table 12: Transaction Information And Status (TxInfAndSts, D-Level) 62
Table 13: Swiss Status Reason Codes 63
Table 14: Character conversion 70

Appendix F: Table of figures

Figure 1: Payment Initiation message flow - summary 7
Figure 2: Degree of concordance between the Swiss ISO 20022 Payments Standards and ISO 20022 and SEPA 8
Figure 3: Example of graphical representation of an XML message 9
Figure 4: Using the Swiss XML schema 11
Figure 5: Basic message structure for XML message pain.001 13
Figure 6: Group Header (GrpHdr) 19
Figure 7: Payment Information (PmtInf) 22
Figure 8: Credit Transfer Transaction Information (CdtTrfTxInf) 29
Figure 9: References 44
Figure 10: Basic message structure for XML message pain.002 50
Figure 11: Group Header (GrpHdr) 51
Figure 12: Original Group Information And Status (OrgnlGrpInfAndSts) 53
Figure 13: Original Payment Information And Status (OrgnlPmtInfAndSts) 56
Figure 14: Transaction Information And Status (TxInfAndSts) 59
Figure 15: Basis for the Swiss recommendations 71